Truma AquaGo® LP Gas Instant Water Heater

Model: **Truma AquaGo® basic (DLE60B) ***
Truma AquaGo® comfort (DLE60C) *
Truma AquaGo® comfort plus (DLE60CP) *

*** Patent Pending**

⚠ WARNING
If the information in these instructions is not followed exactly, a fire or explosion may result, causing property damage, personal injury, or death.

– Do not store or use gasoline or other flammable vapors and liquids in the vicinity of this or any other appliance.

WHAT TO DO IF YOU SMELL GAS

- Evacuate all persons from the vehicle.
- Shut off the gas supply at the gas container or source.
- Do not touch any electrical switch, or use any phone or radio in the vehicle.
- Do not start the vehicle's engine or electric generator.
- Contact the nearest gas supplier or certified service technician for repairs.
- If you cannot reach a gas supplier or certified service technician, contact the nearest fire department.
- Do not turn on the gas supply until gas leaks have been repaired.

Installation and service must be performed by a certified service technician, service agency, or the gas supplier.

US

Operating instructions Page 2
Installation instructions Page 25

To be kept in the vehicle.
This document is part of the water heater.

Intertek
4010007

Conforms to ANSI Std. Z21.10.3
Certified to CSA Std. 4.3

Sales and Service
Truma Corp.
825 East Jackson Blvd.
Elkhart, IN 46516
USA
Toll Free 1-855-558-7862
Fax 1-574-538-2426
info@trumacorp.com
www.truma.net

More information https://www.caravansplus.com.au

Truma AquaGo® instant water heater (appliance)

Overview / Designation of parts

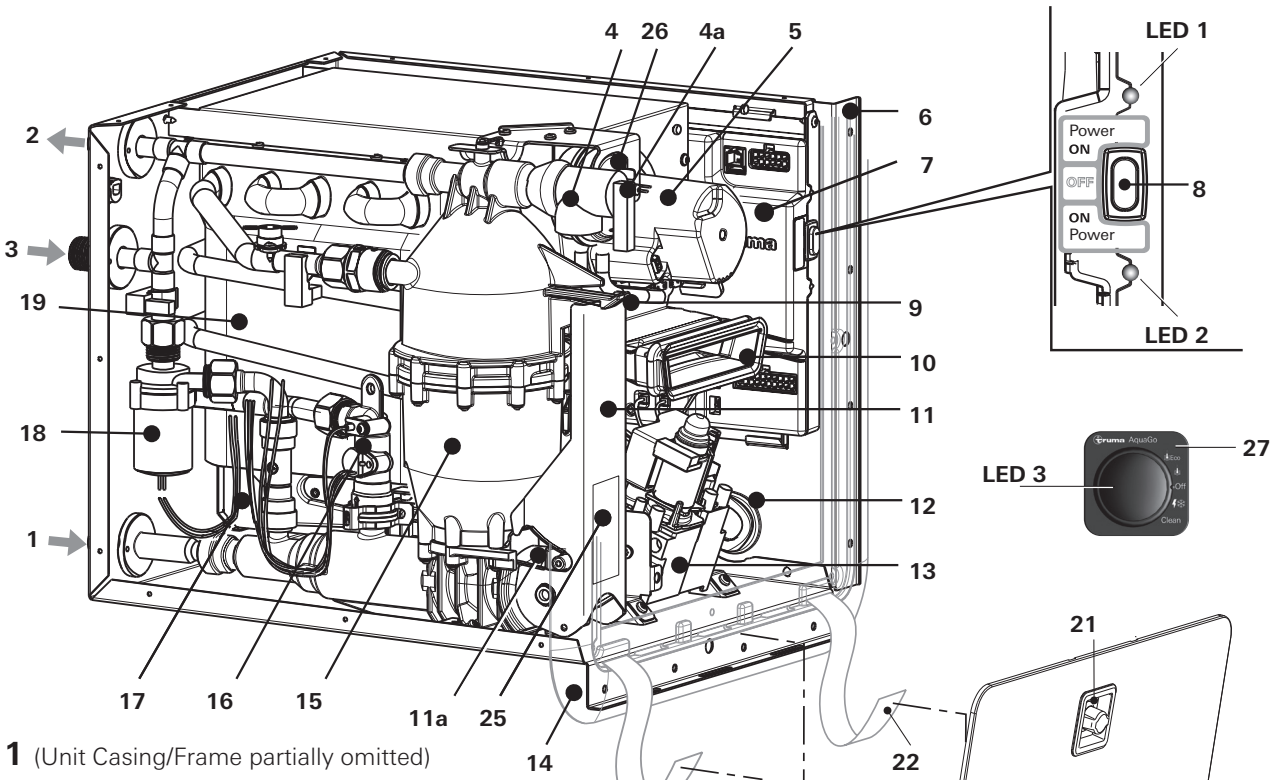

Fig. 1 (Unit Casing/Frame partially omitted)

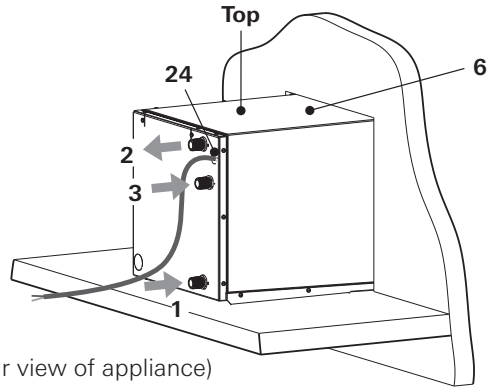

Fig. 2 (rear view of appliance)

Legend

1 Cold water connection 1/2 in. NPT
2 Hot water connection 1/2 in. NPT
3 Circulation line connection 1/2in. NPT (AquaGo® comfort plus model only)
4 Pressure relief valve
4a Test lever
5 Flue fan
6 Unit casing
7 Control unit
8 POWER switch
9 Latch
10 Flue duct
11 Easy Drain Lever
11a Water inlet filter
12 Gas pipe grommet (side)
13 Gas valve
14 Cover plate
15 Temperature stabilizer
16 Water flow sensor
17 Burner
18 Circulation pump (AquaGo® comfort and AquaGo® comfort plus models)
19 Heat exchanger
20 Access door (assembly)
21 Turn lock
22 Webbing
23 Venting grid (air inlet, exhaust)
24 Grommet for 12 V cable (power supply)
25 Type plate
26 Exhaust pressure switch
LED 1 Power ON LED – green
LED 2 Error code LED – red
LED 3 Status LED 3 – yellow

More information https://www.caravansplus.com.au

Table of Contents

Overview / Designation of parts 2
Intended use 3
Prohibited use 3

Consumer Safety Information

Safety symbols and signal words 4
Safety behavior and practices 4
Safety features 6

Operating Instructions

How the appliance works 7
Pressure relief valve 8
Access door 8
Opening the access door 8
Removing the access door 9
Closing the access door 9
Starting the appliance 9
Inspections before each use 9
Operating procedures 10
Switching ON the appliance 11
Operating modes (control panel) 11
Switching OFF the appliance 12
Winter operation 12
Only AquaGo® comfort / AquaGo® comfort plus 13
Winterizing 13
Winterizing the appliance 13
Winterizing the RV with a winterizing fluid 14
AquaGo® technical data 14
Maintenance 15
Draining the water and cleaning the water inlet filter 15
Decalcification 16
Decalcification frequency 16
Decalcification (models **without** control panel) 17
Decalcification (models **with** control panel) 17
Interrupting decalcification 20
Accessories 21
Troubleshooting 22
"AquaGo" MANUFACTURER LIMITED WARRANTY 24

Installation Instructions

Safety behavior and practices 25
Selecting a suitable location 26
Preparing for installation 27
Preparing the installation site 27
Preparing the gas connection 28
– Gas side connection 28
– Gas rear connection 29
Preparing the water connection 29
Preparing the 12 V DC electrical connection 30
Mounting the control panel 30
Connection diagrams 31
Installing the appliance 32
Connecting the gas line (gas side connection) 33
Connecting the gas line (gas rear connection) 34
Functional check 36
APPENDIX A – Error Codes 37
APPENDIX B – Functional Diagram 38
APPENDIX C – Spare Parts (all models) 39
APPENDIX D – Electrical Connection Diagram 40
APPENDIX E – Notes for painting the access door and cover plate 41

Intended use

The Truma AquaGo® instant water heater (appliance) may be used only to heat water in recreational vehicles (RVs) that are used for recreation, travel, or camping.

RVs are recreational vehicles designed as temporary living quarters for recreation, camping, or travel use. Such vehicles have their own power or are towed by another vehicle.

Prohibited use

Any use other than the intended use (see above) is prohibited.
Examples of prohibited use:

- Use in a marine environment.
- Use as part of a space heating system.
- Use in mobile homes.
- Use in food trucks or roadside food vending vehicles.
- Use in construction trailers.
- Use as a pool heater.

California Proposition 65 lists chemical substances known to the state to cause cancer, birth defects, death, serious illness, or other reproductive harm. This product may contain such substances or such substances may be formed from combustion of fuel (gas) or be components of the product itself.

More information https://www.caravansplus.com.au

Consumer Safety Information

Safety symbols and signal words

⚠ This is the safety alert symbol. This symbol alerts you to potential hazards that can kill or hurt you and others.

⚠ DANGER indicates a hazardous situation which, if not avoided, will result in death or serious injury.

⚠ WARNING indicates a hazardous situation which, if not avoided, could result in death or serious injury.

⚠ CAUTION indicates a hazardous situation which, if not avoided, could result in minor or moderate injury.

NOTICE is used to address practices not related to physical injury.

ⓘ Other important information or tips

Safety behavior and practices

Ensuring a safe operating environment

- **⚠ DANGER** Suffocation through exhaust gases. To ensure dissipation of exhaust gases, operate the appliance outdoors only.
  - Never use in enclosed spaces or tents or breathe in the exhaust gases.
  - If installing an awning, make sure that the exhaust system terminates to the outdoors.
  - If you park the RV in an enclosed space, such as a garage or repair shop:
    - You must block the fuel supply.
    - You must switch the appliance off at the control panel.

- Use the appliance only with a functioning LP gas and carbon monoxide detector installed in the RV. For installation, operation and function test follow the manufacturer's guidelines.

- Keep the air inlet and exhaust outlet free of obstructions in order to ensure clean combustion.

- **Do not** place articles on or against the appliance. Do not lean any objects against the water heater's access door or place any foreign objects within 2 feet (61 cm) of the access door.

- **Do not** use or store flammable materials near the appliance.

- **Do not** spray aerosols in the vicinity of the appliance while it is in operation.

- **Do not** modify the appliance.

Responsibilities of the operator

- Avoid possible serious health issues caused by electromagnetic radiation. All persons with a pacemaker are prohibited from opening the access door and maintaining the appliance during operation.

- The operator is responsible for the water filled into the appliance and its quality.

- The use of upright gas cylinders from which gas is taken in the gas phase is mandatory for the operation of gas regulators, gas equipment and gas systems. Gas cylinders from which gas is taken in the liquid phase (e. g. for forklifts) must not be used, since they would result in damage to the gas system.

- For your own safety it is absolutely necessary to have the complete gas installation regularly checked by an expert (at least every 2 years). The vehicle owner is always responsible for arranging the gas inspection.

More information https://www.caravansplus.com.au

Safe operation

- Use with LP gas (propane) only. Butane or any mixtures containing more than 10% butane must not be used.
- LP tanks must be filled by a qualified gas supplier only.

- The nominal gas system pressure must be 10.5 in. wc.

- Hot water can be dangerous, especially for infants, children, the elderly, or infirm. It can cause severe burns. Therefore:
  - Never actuate the pressure relief valve (Fig. 1 – 4) as long as the appliance is still hot.
  - Never actuate the Easy Drain Lever (Fig. 1 – 11) as long as the appliance is under water pressure and/or still hot.
  - Always check the water temperature before entering a shower or bath.

- How long before hot water causes skin damage?

Temperature °F (°C)	Time before skin becomes scalded
155 (68)	1 second
148 (64)	2 seconds
140 (60)	5 seconds
133 (56)	15 seconds
127 (52)	1 minute
124 (51)	3 minutes
120 (48)	5 minutes
100 (37)	safe bathing temperature

Source: Moritz, A.R. / Herriques, F.C.: Studies of thermal injuries: the relative importance of time and surface temperature in causation of cutaneous burns A. J. Pathol 1947; 23: 695 – 720

- The water pressure on the inlet side must be limited to 65 psi (4.5 bar), otherwise internal components of the appliance will be damaged. On (city) water connections with a pressure higher than 65 psi (4.5 bar) a pressure regulator is strongly recommended.

While driving

- To avoid damage, make sure the access door (Fig. 1 – 20) to the appliance is closed before moving the RV, as follows:
  - Turn lock is engaged.
  - Access door is flush with the cover plate.

- Shut OFF gas and the LP tank when moving the RV. This disables all gas appliances and pilot lights. Gas appliances must never be operated while the vehicle is in motion.

- Shut OFF the appliance when refueling or pumping gas, in multi-storey car parks, in garages or on ferries.

- To avoid damage, make sure no spray water enters the appliance when cleaning the RV, e.g., do not spray directly into the openings/venting grid.

Safe handling of malfunctions

- Switch OFF the gas supply and the appliance:
  - if anything seems to be out of the ordinary.
  - if you smell gas.

- **⚠ DANGER** Fire / explosion if you attempt to use an appliance that has been damaged by flooding or if the vehicle has been involved in an accident. A damaged appliance must be repaired by an expert or be replaced.

- Only carry out repairs yourself if the solution is described in the troubleshooting guide of this manual.

- A damaged appliance may have to be replaced with a new one.

Safe maintenance and repair

- Repairs may only be carried out by an expert.

- Children must not carry out maintenance, repair or cleaning work.

- Before accessing terminals, please secure all supply circuits (i.e. 12 V) and ensure that the gas supply is securely turned off.

- Any work involving connection or interconnecting wiring must be carried out by a licensed electrician.

More information https://www.caravansplus.com.au

- Only use Truma AquaGo® decalcification tablets to decalcify the appliance to avoid damage and the voiding of your warranty. Never use vinegar. Call your local AquaGo® dealer or service provider or see www.truma.net for more information.
  - The use of non-Truma-approved substances for decalcification can cause chemical reactions and produce hazardous substances that could enter the drinking water.

- Any alteration to the appliance or its controls can cause unforeseen serious hazards and will void the warranty.

- After a long period of winterization: Flush all hot/cold water hoses and the appliance thoroughly with drinking water before using it.

- Keep the appliance free of foreign objects, e.g., leaves, animals, spiderwebs, and keep the area around free of snow and ice. The appliance will not function properly if the intake air or exhaust terminal is obstructed.

Safety features

The appliance is equipped with the following safety devices:

Flame monitoring
If the flame goes out, the gas supply to the burner is switched off (after 3 failed restarts).

Low-voltage (over-voltage) shutdown
If the voltage drops below 10 VDC (or rises above 16.4 VDC), the appliance shuts off.

Overcurrent protection
If there is a short circuit in the appliance (>10 A), a fuse on the control unit is activated and the appliance is switched off.

Monitoring of the flue fan
If there is a failure of the flue fan, the gas supply to the burner is switched off.

Monitoring of hot water temperature
A water over temperature switch avoids excessively high water temperatures in case of a fault.

More information https://www.caravansplus.com.au

Operating Instructions

Read and follow the "Consumer Safety Information" before operating the appliance.

⚠ WARNING

Scalding injuries caused by hot water!
Water temperatures over 127°F (52°C) can cause severe burns or scalding and in extreme cases even death.

- Before using the hot water faucet or using the shower, allow the hot water to run until the water temperature no longer increases.
- Test the temperature of the water before placing a child in the bath or shower.
- Do not leave a child or an infirm person in the bath unsupervised.

How the appliance works

The appliance was developed exclusively for use in recreational vehicles (RVs).

The appliance is connected between the vehicle's fresh water supply and its hot water plumbing system.

It is powered by propane and a 12 V power supply. The ventilation grid on the access door allows combustion air to flow into the appliance and exhaust gas to flow out.

When the appliance is switched on, the water will be warmed on demand:

- A volume-flow sensor in the appliance detects when the hot water faucet has been opened and the volume flow is greater than approximately 0.4 gallons/min (1.5 liter/min). The burner then starts automatically.

- The burner control continously adjusts the heater output based on volume flow and inlet water temperature, so that the temperature at the hot water outlet is approximately 120 °F (49 °C). A temperature stabilizer is also installed in the appliance to minimize fluctuations of the outlet temperature.

- After some time the maximum temperature at the faucet or in the shower is reached. The length of time will depend on the model (AquaGo® basic, AquaGo® comfort and AquaGo® comfort plus) and variations in the water plumbing (length of pipes, insulation, circulation line, etc.).
  Like in a home shower, a comfortable water temperature at the shower head is reached by mixing in cold water.

- When the volume flow is less than approximately 0.4 gallons/min (1.5 liter/min) and the faucet is closed, the burner is automatically switched off.

The AquaGo® comfort and AquaGo® comfort plus models are equipped with a circulation pump. The circulation pump as well as the burner are switched on automatically by the control unit in order to keep the water temperature above 102 °F (39 °C) in "COMFORT" mode and 41 °F (5 °C) in "ECO" mode.

NOTICE

Risk of damage in frosty conditions.
Refer to "Winter operation" on page 12.

More information https://www.caravansplus.com.au

Pressure relief valve

⚠ WARNING

Scalding injury from hot water and/or tampering with the pressure relief valve!

- Never actuate the pressure relief valve as long as the Truma AquaGo® instant water heater is still hot.
- Do not place a plug or reducing coupling on the outlet part of the valve.

- The pressure relief valve is a safety component and must not be removed for any reason other than replacement.
- The pressure relief valve is not serviceable; if defective, it must be replaced. It must be replaced by a certified service technician.
- Tampering with the pressure relief valve will void the warranty.

The appliance is equipped with a pressure relief valve (Fig. 3) that complies with the standard for Relief Valves for Hot Water Supply Systems, ANSI Z21.22

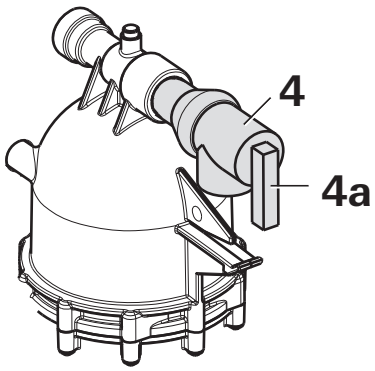

Fig. 3

4 Pressure relief valve
4a Test lever

Access door

Opening the access door

1. Turn the turn lock counterclockwise ↶ into the vertical position.

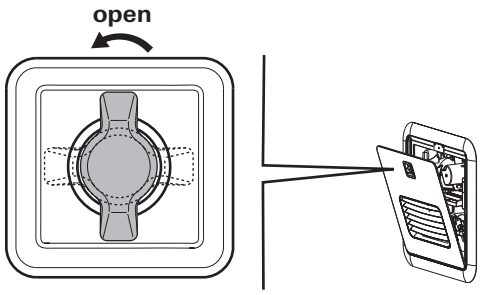

Fig. 4

- The access door can be opened in two different positions:
  - Position ① is the maximum opening width for switching the appliance on or off.
  - Position ② is the starting position for removing the access door.

NOTICE

Damage to the hinge!

- Do not try to remove the access door in Position ①. Position ① is the maximum opening width of the access door.
- Only remove the access door in Position ②.

2. Open the access door to Position ①.

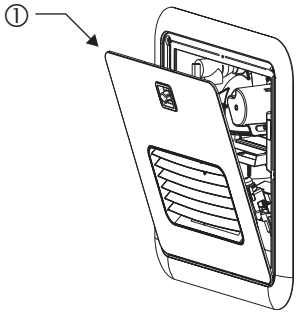

Fig. 5

More information https://www.caravansplus.com.au

Removing the access door

1. Open the access door to Position ②.
2. Move the access door upwards to remove it.

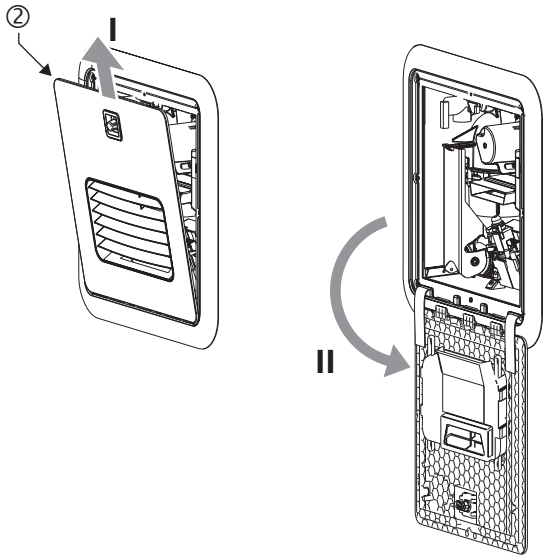

Fig. 6

Closing the access door

NOTICE

Damage to the access door and the RV if the access door is not closed properly!

- Make sure that the access door is flush with the cover plate when closed.

1. If removed, insert the access door into the cover plate.
2. Make sure that the webbing is not pinched between the access door and the cover plate.
3. Press the access door against the cover plate.
4. Turn the turn lock clockwise ↷ into the horizontal position.

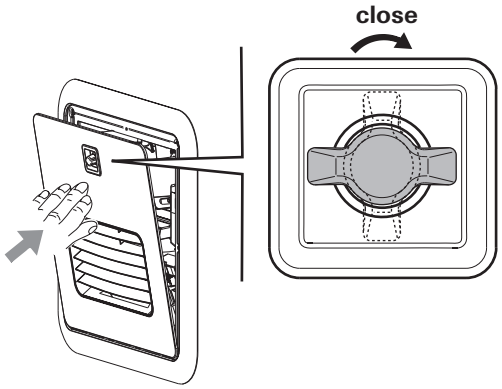

Fig. 7

Starting the appliance

⚠ WARNING

Danger of over-temperature and toxic exhaust gases!

- Use with LP gas (propane) only. Butane or any mixtures containing more than 10 % butane must not be used.
- Keep the air inlet and exhaust gas outlet free of obstructions. Do not lean any objects against the water heater's access door or place any foreign objects within 2 feet (61 cm) of the access door.

⚠ WARNING

Danger of combustion, personal injury and damage to RV!

- Keep the area around the appliance free from combustible materials, gasoline, and other flammable vapors or liquids.
- Switch the gas supply and the appliance off:
  - if anything seems to be out of the ordinary.
  - if you smell gas.
  - if you move the RV.
  - before entering a gas station.
  - before entering a tunnel.

Inspections before each use

Check the appliance for the following points before each use. In case of damage, contact an authorized Truma service provider and do not operate the appliance.

1. Check for visible damage, e.g., on the cover plate or access door.
2. Provide adequate quantities of propane gas and fresh water.
3. Switch ON and check 12 V power supply of your RV.
4. Check that the access door of the appliance is closed.
5. Keep the appliance free of foreign objects, e.g., leaves, animals, spiderwebs, and keep the area around free of snow and ice. The appliance will not function properly if the intake air or exhaust terminal is obstructed.

More information https://www.caravansplus.com.au

Operating procedures

NOTICE

Risk of damage in frosty conditions.
In frosty conditions there is a risk that water in pipes, faucets and appliances could freeze. This can cause considerable damage.

- Before you fill water into appliances and parts that transport water, you must heat the installation area sufficiently so that the water cannot freeze.

Proceed as follows to fill the appliance with water:

1. Close open bypass lines (if present).

2. Turn on fresh water supply or switch on water pump.

3. Fill the plumbing system.
   - Open all water-release points, e.g., cold and hot water faucets, showers, toilets.

   It is important that you bleed the water system before starting the appliance.

   - Once water flows, the plumbing system is vented. Close the water-release points.

4. Start the appliance as follows:
   - Make sure that the LP gas supply is turned on.
   - Switch on the 12 V power supply (RV).
   - Open the access door (refer to “Opening the access door” on page 8).
   - Switch on the appliance at the POWER switch. Refer to “Switching ON the appliance” on page 11.

5. **AquaGo® comfort / AquaGo® comfort plus:**
   - Select the desired operating mode (refer to “Operating modes (control panel)” on page 11.
   - Close the access door (refer to “Opening the access door” on page 8).

⚠ WARNING

Scalding injuries caused by hot water!
Water temperatures over 127°F (52°C) can cause severe burns or scalding and in extreme cases even death.

- Before using hot water faucet or using the shower, allow the hot water to run until the water temperature no longer increases.
- Test the temperature of the water before placing a child in the bath or shower.
- Do not leave a child or an infirm person in the bath unsupervised.

- There may be a variation between the temperature delivered from the appliance and the temperature at the faucet due to water conditions or the length of pipe from the appliance.
- The presence of a flow restrictor in the hot water line may limit the water flow.

How to use hot water:
- To obtain the desired water temperature at the faucet or in the shower, mix cold and hot water.
- Particularly when showering, wait until the water temperature has stabilized before entering or allowing other people or animals to enter the shower.

More information https://www.caravansplus.com.au

Switching ON the appliance

1. Open the access door (refer to “Opening the access door” on page 8).

2. To switch on the appliance, switch the POWER switch (Fig. 8 – 8) to one of the two “ON” positions.

   Both ON positions on the POWER switch have the same function. Choose your preferred position.

- When the green power ON LED 1 (Fig. 8 – LED 1) is lit, the appliance is switched on.
- If the red error code LED 2 (Fig. 8 – LED 2) is lit / flashes, there is a fault or warning. Refer to “APPENDIX A – Error Codes” on page 37).

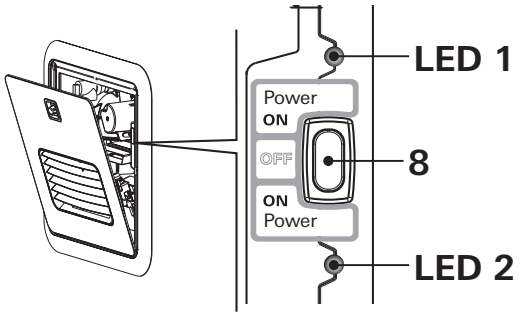

Fig. 8

AquaGo® basic

- The operating mode is set automatically to “BASIC”.
- The appliance is now ready for use.
- Water temperature at the outlet is approximately 120 °F (49 °C).

AquaGo® comfort / AquaGo® comfort plus

- The appliance is now ready for using the control panel inside your vehicle. Refer to “Operating modes (control panel)” on page 11.

Operating modes (control panel)

AquaGo® comfort / AquaGo® comfort plus
A control panel to select the operating mode (included with the delivery from serial number DLE60X(X)27100000).

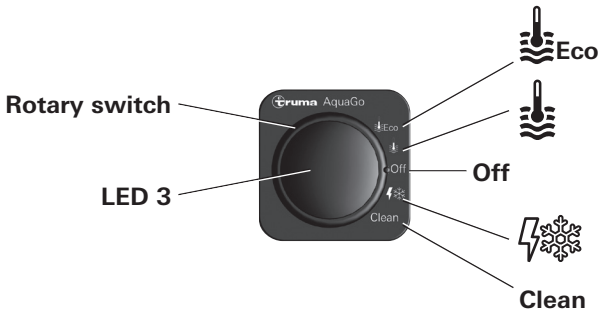

Fig. 9

With the rotary switch (Fig. 9) you can choose between the following operating modes:

Sign	Operating mode / Description
Eco	ECO
	The appliance is now running in energy-saving mode. • Water temperature at outlet is approximately 120 °F (49 °C). • Prevention of freezing by using propane gas. The temperature in the appliance is automatically kept above 41 °F (5 °C) . • During operation, the yellow status LED 3 is lit.
	COMFORT
	The appliance is now running in a mode that provides rapid availability of hot water. • Water temperature at the outlet is approximately 120 °F (49 °C). • Stand-by heat. The temperature in the appliance is automatically kept above 102 °F (39 °C). • During operation, the yellow status LED 3 is lit.
Off	Stand-by. The appliance is not running in any operating mode. • The yellow status LED 3 is off. To switch off the POWER and gas supply (refer to “Switching OFF the appliance” on page 12).

More information https://www.caravansplus.com.au

Sign	Operating mode / Description
	ANTIFREEZE
	Prevention of freezing using 12 VDC electricity: Operating mode with installed electric antifreeze kit (available as an accessory) and appliance switched on. The temperature in the appliance is automatically held above 41 °F (5 °C). • During operation, the yellow status LED 3 is lit.
Clean	DECALCIFICATION
	Only AquaGo® comfort / AquaGo® comfort plus. See Section "Decalcification" on page 16. For safety reasons, after 30 seconds the decalcification process cannot be stopped until the system has been rinsed in accordance with the instructions. See "Interrupting decalcification" on page 20.

Description of the yellow status LED 3
(see Fig. 9 – LED 3)

Signal	Meaning
LED 3 lit	Appliance is switched ON
LED 3 is off	Appliance is switched OFF. Refer to "Switching OFF the appliance" on page 12.
Every 7 s, LED 3 is interrupted for 1 s	The appliance must be decalcified
LED 3 flashes slowly 1 s on, 1 s off	Decalcification mode has been activated
LED 3 flashes quickly	Before you use the water system you must rinse it (refer to step f) "Rinsing the water system" on page 19).
LED 3 flashes 2 x briefly after a break.	There is a fault in the appliance. The exact fault diagnosis must be determined via error LED 2. Refer to "APPENDIX A – Error Codes" on page 37. Risk of freezing if the temperature in the appliance is below 37.4 °F (3 °C).

Switching OFF the appliance

1. **AquaGo® comfort / AquaGo® comfort plus**
   – Set the control panel to "Off".

2. Open the access door (reter to "Opening the access door" on page 8).

3. Switch off the appliance at the POWER switch (Fig. 8).
   – The green Power-ON LED 1 (Fig. 8) extinguishes.

4. Close the access door (refer to "Closing the access door" on page 9).

5. If the appliance is not needed, turn off the gas supply to the appliance.

If you intend to place the RV into storage or turn off the appliance during freezing temperatures, refer to "Winterizing" on page 13.

Winter operation

NOTICE

Risk of damage in frosty conditions.
In frosty conditions there is a risk that water in pipes, faucets and appliances could freeze. This can cause considerable damage.

- **Never operate the AquaGo® basic in frosty conditions, this model must be winterized (refer to "Winterizing" on page 13).**
- Winter operation will not protect the RV's entire water system. Water lines, faucets, water tanks and the external water valves and the vehicle must be heated separately.
- The RV must be designed for winter use/ freezing conditions.
- The water pipes in the RV must be ice-free to operate the AquaGo® comfort / AquaGo® comfort plus in winter. Otherwise, there is no water flow and the appliance does not start.

More information https://www.caravansplus.com.au

Only AquaGo® comfort / AquaGo® comfort plus

When the vehicle is standing, to -4 °F (-20 °C)

- The appliance has a built-in thermostat that will start the burner and the circulation pump whenever the temperature in the appliance falls below 41 °F (+5 °C). The burner will automatically shut off when it senses a temperature above 111 °F (44 °C). You must leave the mode switch in the "ECO" or "COMFORT" position.

- NOTICE For the appliance to operate properly, you must ensure a constant supply of power (12 V), propane gas, sufficient water in the system, and you must leave the appliance powered "ON". The water system must be bled so that the circulation pump works.

- NOTICE If the vehicle is standing and ambient temperatures are below -4 °F (-20 °C), the appliance must not be operated and must be winterized. To winterize the appliance (refer to "Winterizing" on page 13).

While driving (or if there is no gas supply), to -4 °F (-20 °C)

- NOTICE Gas must not be used for heating while the vehicle is in motion. Ask your dealer / vehicle manufacturer about options for heating your RV while driving.

- An electric antifreeze kit is available as an accessory (ask your dealer). With this kit, the appliance can be kept frost-free while you are driving or if there is no gas supply (to ambient temperatures of -4 °F (-20 °C)). The electric antifreeze kit includes detailed instructions.

– NOTICE While the vehicle is in motion and at ambient temperatures below -4 °F (-20 °C) the appliance must not be operated and must be winterized. To winterize the appliance (refer to "Winterizing" on page 13).

Winterizing

NOTICE

Severe damage to the water system components and the appliance!
Any damage caused by freezing or an unsuitable winterizing fluid will not be covered by warranty.

- Follow the recommendations below if the appliance will be stored under freezing conditions or for an extended period of time.
- Winterize the appliance at the start of the winter season or before travelling to a location where freezing conditions are likely.

If your RV is equipped with a bypass around the appliance, separate the appliance from the water system with the bypass.

Winterizing the appliance

To winterize the appliance, drain all water from the appliance ("Draining the water and cleaning the water inlet filter" on page 15).

Once the water has been drained, the appliance is protected against freezing conditions.

More information https://www.caravansplus.com.au

Winterizing the RV with a winterizing fluid

- Winterizing the RV with a winterizing fluid is only possible with an installed bypass kit (not in scope of delivery)
- Refer to the connection diagram "Winter operation" on page 12 for all letters referred to in the following description.

Winterizing AquaGo® basic / AquaGo® comfort

1. Close valves A and B.
2. Open valve C.
3. Drain the appliance ("Draining the water and cleaning the water inlet filter" on page 15).
4. Flush the RV's water system with a suitable winterizing fluid according to the supplier's or RV manufacturer's guidelines.

Winterizing AquaGo® comfort plus

1. Close valves A, B and E.
2. Make sure that valve D remains in the closed position.
3. Open valve C.
4. Drain the appliance ("Draining the water and cleaning the water inlet filter" on page 15).
5. Flush the RV's water system with a suitable winterizing fluid according to the supplier's or RV manufacturer's guidelines.
6. Close all faucets (if open).
7. Open valve D.
8. Wait until winterizing fluid has drained. Collect escaping fluid in a suitable vessel.
9. Close valve D.

AquaGo® technical data

BTU/h (Nominal input rate)		20,000 – 60,000	
Fuel		LP gas (propane only)	
Fuel inlet pressure		10.5 – 14 in. wc (26.2 – 34.9 mbar)	
Fuel manifold pressure		1.3 – 10 in wc (3.2 – 24.9 mbar)	
Nominal voltage		12 V DC (< 1 V_{pp})	
Power input			
AquaGo® basic		< 1.5 A	
AquaGo® comfort		< 2.5 A	
AquaGo® comfort plus		< 2.5 A	
Water operating pressure		65 psi (4.5 bar) max.	
Standard water outlet temperature		120 °F (49 °C)	
Water volume		0.35 gallons (1.3 liter)	
Ambient temperature			
AquaGo® basic		+32 °F…+104 °F (+5 °C…+40 °C)	
AquaGo® comfort AquaGo® comfort plus		-4 °F…+104 °F (-20 °C…+40 °C)	
Dimensions (without flange and frame)			
	Width	Height	Depth
in.	12.5	12.5	15.5
mm	318	318	394
Dimensions of frame			
Size XS			
in.	15.1	15.5	0.8
mm	384	394	20.2
Standard			
in.	17.7	17.7	0.8
mm	450	450	20.2
Adapter			
in.	20.1	20.1	0.8
mm	510	510	20.2
Installation cutout and depth			
	Width	Height	Depth*
in.	12.8	12.8	17.7 >19.7**
mm	324	324	450 >500**
Weight unit without access door		(approx.) 34.2 lbs (15.5 kg)	
Weight access door standard and access door XS		(approx.) 2.9 lbs (1.3 kg)	
Weight access door adapter kit		(approx.) 5.5 lbs (2.5 kg)	

* Depending on application
** Recommended

Maintenance

Repairs must be performed by a certified service technician. Truma recommends that the appliance be serviced annually by a certified service technician. Verify proper operation after servicing.

⚠ WARNING

High temperatures or repair attempts while the gas supply is turned on may result in scalding injuries!

- Turn OFF the electrical power supply and the LP gas supply before starting maintenance and repair work.
- Allow the appliance to cool down.
- Never actuate the pressure relief valve as long as the appliance is still hot.

⚠ CAUTION

Injuries caused by the Easy Drain Lever!

- Never actuate the Easy Drain Lever as long as the appliance is under water pressure and/or is still hot.

⚠ CAUTION

Sharp edges can cause cuts and injury!

- Always wear protective gloves to avoid injuries from sharp edges during maintenance work.

Draining the water and cleaning the water inlet filter

To keep the appliance fully functional, clean the water inlet filter at least once a year.

1. **AquaGo® comfort / AquaGo® comfort plus**
   Set the control panel to "Off".

2. Remove the access door (refer to "Removing the access door" on page 9).

3. Switch OFF the appliance at the POWER switch.

4. Open a hot water faucet and wait for cold water.

5. Turn OFF the water supply or switch OFF the water pump.

6. Leave the hot water faucet open in order to depressurize and vent the water system.

⚠ CAUTION

Injuries caused by the Easy Drain Lever!
When the Easy Drain Lever is folded out, it protrudes beyond the side wall of the vehicle.

- When walking past or stooping down, make sure that you and others have sufficient distance.

7. Open the latch with your thumb while pulling the Easy Drain Lever down as far as it will go.

8. Remove the water inlet filter (or heating cartridge) as shown in Fig. 10 and rinse it with clean water.

9. Inspect the O-rings on the water inlet filter (or heating cartridge) for cracks. Change the filter assembly (spare part, refer to "APPENDIX C – Spare Parts (all models)" on page 39) if there are cracks.

⚠ CAUTION

Danger of crushing/pinching of fingers when the Easy Drain Lever is closed!

- Never put fingers between Easy Drain Lever and water inlet filter or latch.

If, during installation, it is difficult to install the filter cartridge, use a small amount of soap on the O-rings. Never use grease because the O-rings are not resistant to grease.

10. Install the water inlet filter as shown in Fig. 10. Observe the correct installation position and close the Easy Drain Lever until it is locked by the latch.

    You can hear a "clicking" sound as the Easy Drain Lever engages.

11. Insert and close the access door (refer to "Closing the access door" on page 9).

More information https://www.caravansplus.com.au

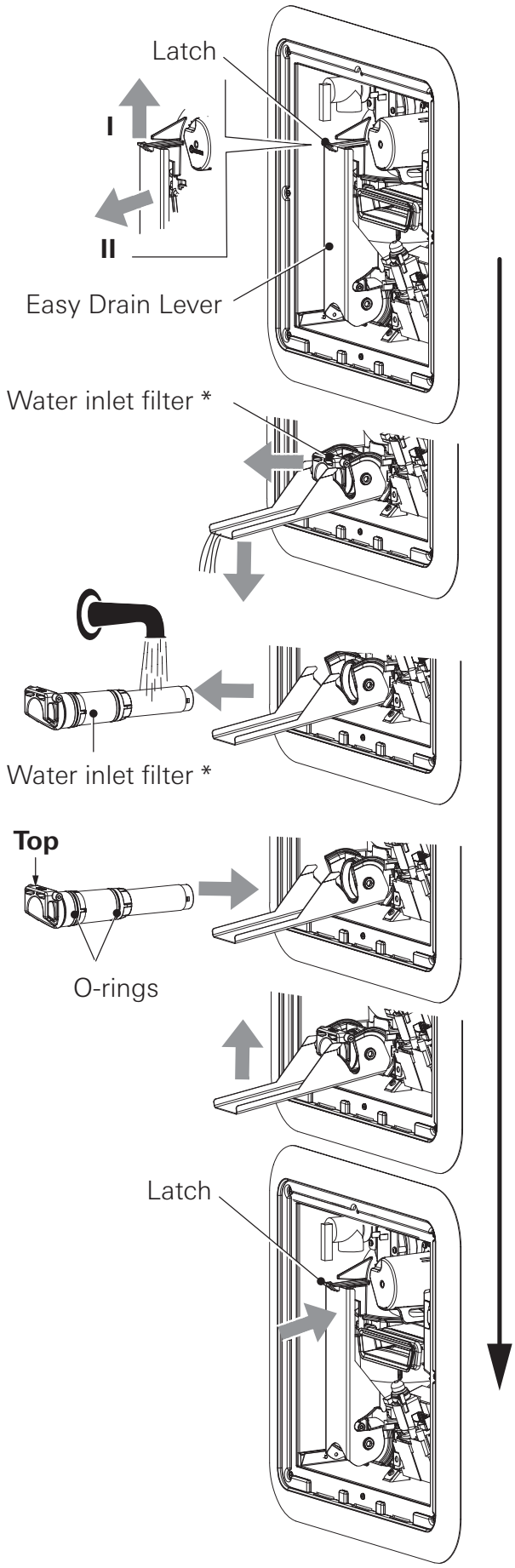

* or heating cartridge

Fig. 10

Decalcification

NOTICE

Risk of damage in frosty conditions.
In frosty conditions there is a risk that water in pipes, faucets and appliances could freeze. This can cause considerable damage.

- Do not decalcify the appliance in frosty conditions.

Decalcification frequency

Lime scale occurs especially as a result of precipitation from “hard” water. The appliance must be decalcified regularly depending on water hardness and hot water consumption.

Recommended decalcification frequency per year

Water hardness mg/l $CaCO_3$	Very hard >180	**1**	**2**	**4**
	Hard 121 – 180	**1**	**1**	**3**
	Moderately hard 61 – 120	**1**	**1**	**2**
	Soft 0 – 60	**1**	**1**	**1**
	Use*	few	normal	frequent

* Hot water consumption (approximately)

low	635 gallon/year	2400 l/year
normal	1585 gallon/year	6000 l/year
high	6350 gallon/year	24000 l/year

More information https://www.caravansplus.com.au

Decalcification (models **without** control panel)

Models AquaGo® basic without control panel:

You can have these models decalcified by a Truma service partner. Please contact the following address:

Truma Corp.
825 East Jackson Blvd.
Elkhart, IN 46516
USA
Toll Free 1-855-558-7862
Fax 1-574-538-2426
info@trumacorp.com
www.truma.net

Refer to “Decalcification frequency” on page 16 for the decalcification frequency.

Decalcification (models **with** control panel)

AquaGo® comfort / AquaGo® comfort plus with control panel (included with delivery).

An integrated water consumption meter recognizes (after hot water consumption of approx. 1585 gallons / 6000 l) that decalcification is necessary. The assumed water hardness is “hard” and cannot be changed. The yellow status LED 3 (Fig. 9) indicates that decalcification is necessary (goes off briefly about every 7 seconds).

⚠ WARNING

The use of non original Truma AquaGo® decalcification tablets (e.g. vinegar) for decalcification can cause chemical reactions and produce hazardous substances that could enter the drinking water supply.

- **Do not** mix Truma AquaGo® decalcification tablets with other substances to avoid chemical reactions and production of hazardous substances.

- Only use Truma AquaGo® decalcification tablets to decalcify the appliance to avoid:
  - chemical reactions and production of hazardous substances,
  - damage to your appliance,
  - and the voiding of your warranty.
  - Call your local AquaGo dealer or service provider or see www.truma.com for more information to obtain Truma AquaGo® decalcification tablets.

Irritation of skin and eyes in case of contact with decalcification agent
Wear protective gloves, eye protection and face protection to avoid contact.

- Never use the water supply in the RV during decalcification
- In case of skin contact with the decalcification agent, immediately rinse the affected area with plenty of water.
- In case of eye contact, hold eyelid open and rinse with running water for 10 – 15 min. Remove contact lenses, if present and easy to do. Continue rinsing. Consult an eye specialist.
- If you swallow the decalcification agent, immediately rinse your mouth and drink plenty of water in small sips. Do not vomit. Consult a doctor.

More information https://www.caravansplus.com.au

During decalcification, you must also observe the following

- Damage to the appliance if decalcification is interrupted.
  - You must complete the decalcification process and then rinse thoroughly with clean water.
  - Allow about 3 hours for decalcification. The appliance works on its own for most of this time.

- Sensitive surfaces (e. g. marble) may be damaged through contact with the decalcification agent.
  - Immediately remove splashes of decalcification agent on these surfaces.

a) Preparing for decalcification

For safety reasons, once the decalcification process has started it must not be stopped until the system has been rinsed (see process f). All operating modes of the appliance are blocked until decalcification has been completed.

Tasks within the RV
• Set the control panel to “Off”. • Turn OFF the water supply or switch OFF the water pump. • Open a hot water faucet to relieve pressure in the system. • On all water faucets attach the warning sign “Caution decalcification in progress” in a clearly visible position. Warning signs are enclosed with the decalcification tablets.

b) Draining the water system

Tasks outside the RV
• Remove the access door (refer to “Removing the access door” on page 9). • Switch OFF the appliance at the POWER switch. • Drain the water system and remove the water inlet filter. Do do this, refer to “Draining the water and cleaning the water inlet filter” on page 15, Steps 4 to 8. ***NOTICE*** You must use the water inlet filter for decalcification (included with the delivery Fig. 1 – 11a). If you are using an electric antifreeze kit, it must be removed and be unplugged from the power supply before decalcification (see Fig. 11).

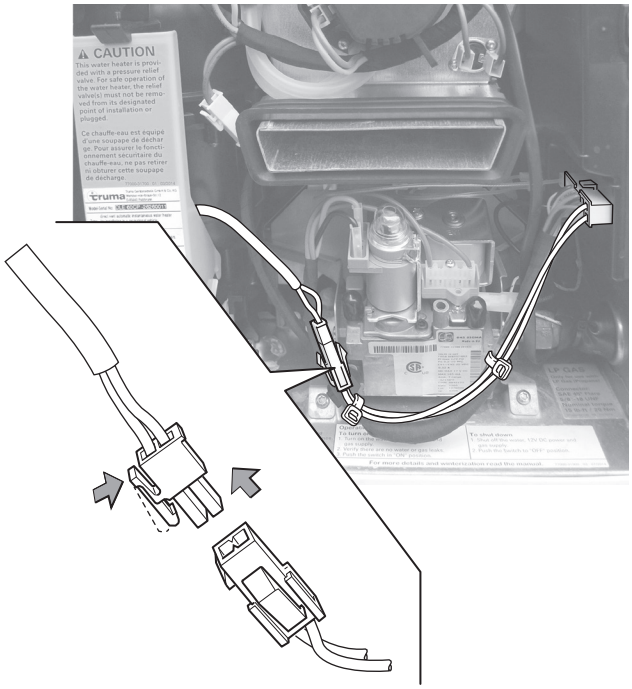

Fig. 11

More information https://www.caravansplus.com.au

c) Introducing the decalcification agent

Tasks outside the RV
• **⚠ WARNING** Irritation of skin and eyes in case of contact with decalcification agent. Wear protective gloves, eye protection and face protection to avoid contact. • Fill the water inlet filter with 6 Truma AquaGo® decalcification tablets (content of one blister pack).   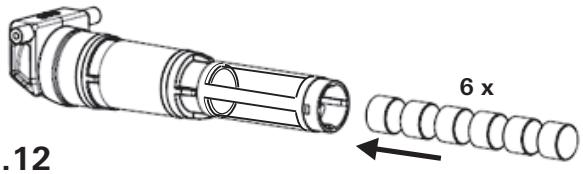   **Fig.12** • Re-insert the water inlet filter. See Step 9 in "Draining the water and cleaning the water inlet filter" on page 15. • Switch ON the appliance at the POWER switch.

d) Filling the water system

Tasks within the RV
• Turn on fresh water supply or switch on water pump ℹ The decalcification tablets dissolve in water quickly (approx. 10 minutes). So that the decalcification agent is not rinsed out, when filling, run the water only as long as necessary. The Truma decalcification tablets color the water slightly red. • Fill the water system. – Open all water-release points, e.g., hot water faucets, showers, toilets. – Once water flows uniformly, the water system is vented. – Close the water-release points.

ℹ You must bleed the water system thoroughly otherwise the circulation pump cannot circulate the decalcification solution.

e) Starting decalcification

Tasks within the RV
• Set the control panel to "Clean". – If decalcification does not start, switch the appliance on at the POWER switch.

f) Rinsing the water system

ℹ
- You will need about 8 gallons of water to rinse the water system.
- Dispose of (used) decalcification solution in accordance with local laws and regulations.

Tasks within the RV
• Open all water-release points, e.g., hot water faucets, showers, toilets. • Run the water until the status LED 3 (Fig. 9) on the control panel goes out. • Set the control panel to "Off". • Close all water-release points. • Turn OFF the water supply or switch OFF the water pump. • Open a hot water faucet to relieve pressure in the system. ℹ To make sure that the appliance and the water pipes contain no decalcification agent, empty the water system again and refill it.

Tasks outside the RV
• Switch the appliance OFF at the POWER switch (red error code LED 2 (Fig 8) flashes before it switches off). • Drain the water System (refer to “Draining the water and cleaning the water inlet filter” on page 15, steps 4. to 8.). • Install the water inlet filter* referring to step 9. * or antifreeze cartridge if electric antifreeze kit is installed. • Switch ON the appliance at the POWER switch. • Insert and close the access door (refer to “Closing the access door” on page 9).

You have to switch the appliance off and on to unblock decalcification and enable further operation.

g) Filling the water system

Tasks within the RV
• Turn on fresh water supply or switch on water pump. • Fill the water system. – Open all water-release points, e.g., hot water faucets, showers, toilets . – Once water flows uniformly, the water system is vented. – Close the water-release points. • Before you use the water system and the appliance, check the color of the water at all faucets: – Slightly red –> rinse again. – Clear –> decalcification is finished. • Remove the warning signs “Caution decalcification in progress”.

Interrupting decalcification

Decalcification is indicated through slow flashing (1 s on, 1 s off) of the status LED 3 (Fig. 9) on the control panel.

- Decalcification can be interrupted by switching the control panel to “Off”.
  – Decalcification is interrupted after about 2 s.
  – The status LED 3 (Fig. 9) on the control panel flashes quickly.

- **⚠ WARNING** Irritation of skin and eyes in case of contact with decalcification agent. Wear protective gloves, eye protection and face protection to avoid contact.

- First you must take out the water inlet filter and remove any Truma AquaGo® decalcification tablets that it may contain.
  – To take out the water inlet filter, see “Draining the water and cleaning the water inlet filter” on page 15.
  – Dispose of Truma AquaGo® decalcification tablets in accordance with local laws and regulations.

- Before you use the water system again, you must rinse it (see step f) “Rinsing the water system” on page 19) and fill it with water (see step g) “Filling the water system” on page 20).

More information https://www.caravansplus.com.au

Accessories

Electric antifreeze kit *
Truma offers an electric antifreeze kit (part no. 77400-01) that keeps the appliance frost-free to -4 °F (-20 °C) while you are driving or if there is no gas supply. To operate the kit, you need a 12 VDC (120 W) power supply from the vehicle's on-board system. Ask your dealer.

* For AquaGo® comfort / AquaGo® comfort plus.

Truma AquaGo® decalcification tablets
Truma offers decalcification tablets (part no. 77300-01) to decalcify AquaGo® comfort / AquaGo® comfort plus.

Truma rear installation gas connection kit
Truma offers a rear installation gas connection kit (part no. 77000-37500) if installation from the back of the appliance is required.

Truma AquaGo® Comfort upgrade kit
Truma offers a kit (part. no. 77000-00005) to upgrade from AquaGo® basic to AquaGo® comfort.

More information https://www.caravansplus.com.au

Troubleshooting

Problem	Potential cause	Resolution
No hot water at the faucet	Gas supply is turned off or interrupted.	Check and/or turn on gas supply.
	Gas tank is empty.	Refill/replace the gas tank.
	The appliance is switched off.	Switch on the appliance according to instructions (refer to “Operating procedures” on page 10).
	Fresh water supply is turned off.	Open the fresh water supply.
	Power supply to the appliance is switched off.	Switch on power supply to the appliance.
	Defect in the appliance.	LED 2 blinks red (refer to “APPENDIX A – Error Codes” on page 37) and contact a certified service technician if necessary.
Boiling noises	Too much lime scale in the Truma AquaGo® instant water heater.	The appliance must be decalcified (refer to “Decalcification” on page 16).
Hot water temperature too low.	Gas flow to the appliance is too low (gas inlet pressure < 10.5 in. wc).	Consult vehicle documentation to determine if gas supply is capable of providing the necessary volume of gas for the appliance. Contact a service technician to verify a suitable gas installation.
	Volume flow of hot water is too high and/or the temperature of cold water reaching the appliance is too low.	Turn down hot water at the faucet or in the shower in order to reduce volume flow. Potentially retrofit a volume flow throttle into the water system. This must be performed only by a certified service technician.
	Too much lime scale in the appliance.	The appliance must be decalcified (refer to “Decalcification” on page 16).

More information https://www.caravansplus.com.au

Problem	Potential cause	Resolution
Water escaping at pressure relief valve.	Water pressure in water system too high.	Adjust the water pump pressure to a maximum of 65 psi (4.5 bar). If the water system is connected to a central water supply higher than 65 psi (4.5 bar) (rural or urban connection), a pressure reducer must be used. Install a pressure reducer (e.g. Truma pressure reducer) at the fresh water supply.
	Water cannot expand in the water system.	Contact the vehicle manufacturer about retrofitting a pressure compensation element.
	Lime or dirt under the pressure relief valve seat.	Allow the appliance to cool and then slowly raise the test lever (Fig. 3 – 4a) to flush the water system and attempt to force dirt or foreign matter out of the pressure relief valve seat. Replace pressure relief valve. This must be performed only by a certified service technician.
Water escaping at the water inlet filter	Lime or dirt under the O-ring seats.	Clean the O-rings and their corresponding sealing surfaces with clean water.
AquaGo® comfort / AquaGo® comfort plus		
The yellow status LED 3 is off although an operating mode was selected.	Power switch is OFF.	Switch ON the appliance at the POWER switch.
	Power supply to the appliance is switched off.	Switch on the power supply to the appliance.
	Power supply was interrupted.	Reset by switching OFF at the control panel, waiting 2 seconds and then switching on again.

More information https://www.caravansplus.com.au

TRUMA Gerätetechnik GmbH & Co. KG ("TRUMA")

"AquaGo" MANUFACTURER LIMITED WARRANTY

(September 2014)

This limited warranty pertains solely to the "AquaGo" (the "Product") manufactured by TRUMA and sold through its affiliates and dealers in North America.

TRUMA warrants subject to the below stated conditions that the Product will be free from defects in material and workmanship, and will perform in accordance with the technical specifications set forth in the description of the Product for a period of twelve (12) months for newly manufactured parts from the original date of purchase. The original purchaser is advised to register the Product within two (2) months of purchase with **www.truma.net** in order to receive an extended warranty of an additional twelve (12) months. This limited warranty shall only apply if the Product was properly installed according to the installation instructions provided and in compliance with applicable codes.

During the warranty period, TRUMA will repair or replace, at its own discretion and costs, the defective Product or parts or components of such Product reported to TRUMA and which TRUMA determines was defective due to a warranty defect. Costs of diagnosis for a warranty defect are borne by TRUMA. Other costs of diagnosis are not included in this warranty. At the discretion of TRUMA, the replacement of the Product or parts or components thereof (i) may be newly manufactured, (ii) may be assembled from new or serviceable used parts that are equivalent to new parts in performance, or (iii) may have been previously installed.

The customer shall not attempt to repair the Product or resolve the problem without the prior consent of TRUMA. Any attempt by the customer to repair the Product or resolve the problem without the prior consent of TRUMA will void this warranty.

This limited warranty does not cover any defects attributable in whole or in part to (i) non-TRUMA products and services and / or alterations of out-of-specification supplies, (ii) accidents, misuse, negligence or failure of the customer to follow instructions for the proper use, care and cleaning of the Product, (iii) damages caused in gas pressure regulation systems due to foreign substances in the gas (i.e. oil, plasticizers), (iv) external factors (e.g., fire, flood, severe weather), (v) failure of proper transport packaging, or (vi) failure by the purchaser to comply with TRUMA's installation and user manual regarding the Product.

All warranty claims must be reported to TRUMA's authorized warranty service center in the United States: Truma Corp Service Center, **825 East Jackson Blvd., Elkhart, IN 46516, toll free: (855) 558-7862, fax. (574) 538-2426,** service@trumacorp.com, www.truma.net

The purchaser shall provide the following information regarding the potential warranty claim (i) serial number of the defective device, (ii) proof of purchase, (iii) purchaser's contact information.

EXCEPT AS EXPRESSLY STATED AND SET FORTH HEREIN, THERE ARE NO WARRANTIES OR REPRESENTATIONS, EXPRESS OR IMPLIED, CONCERNING THE PRODUCT AND NO SUCH WARRANTIES OR REPRESENTATIONS SHALL BE IMPLIED UNDER ANY APPLICABLE LAW, IN EQUITY OR OTHERWISE, INCLUDING WITHOUT LIMITATION, A WARRANTY OF MERCHANTABILITY, A WARRANTY OF FITNESS FOR A PARTICULAR PURPOSE, OR ANY OTHER WARRANTY WHICH MAY BE IMPLIED UNDER COMMON LAW OR UNDER THE UNIFORM COMMERCIAL CODE OF ANY STATE OR OTHER JURISDICTION OF THE UNITED STATES OF AMERICA.

Unless further limited herein, the entire liability of TRUMA and the customer's exclusive remedy for damages from any cause related to or arising out of a warranty defect, regardless of the form of action, whether in contract or in tort, will not exceed the amount of the purchase

More information https://www.caravansplus.com.au

price for each purchase order for the Product which is the subject matter or directly related to the causes of action asserted.

Unless prohibited under applicable state law, in no event will TRUMA, its agents, subcontractors, affiliates, suppliers and employees be liable for (a) any incidental, indirect, special or consequential damages, including, but not limited to, loss of use, revenue, profits or savings, substitute rental or for any other reason, even if TRUMA knew or should have known of the possibility of such losses or damages, (b) claims, demands or actions against the customer by any person, except as provided by applicable law.

Installation Instructions

Read, observe, and follow these safety instructions to avoid injuries during installation or operation.

Safety behavior and practices

- Installation and service must be performed by an authorized Truma recommended installer, service agency, or OEM. Improper installation, alteration, service, or maintenance can cause property damage, personal injury, or loss of life.
  - Do not attempt installation as a Do-it-Yourself project.

- Install in recreational vehicles (RVs) only.
  - Install the appliance on an exterior wall, with the access door opening to the outside.
  - Install the appliance in the shown orientation.

- Switch off the vehicle's on-board power supply during installation and when connecting the appliance.

- Close the vehicle's gas supply during installation and when connecting the appliance.

- Always wear protective gloves to avoid injuries from sharp edges during installation and maintenance work.

- Handle the appliance only by lifting or grabbing the metal casing or cover plate. Never lift or grab the appliance by any of its delicate interior components.

- Make sure that all combustion air is supplied from outside the RV. DO NOT draw air for combustion from occupied spaces.

More information https://www.caravansplus.com.au

- Make sure that all exhaust gases are directed outside of the RV.
  - Protect building materials from exhaust gases.
  - Never direct the exhaust gases to any outdoor enclosed spaces, such as a porch.

- Any alteration to the appliance or its controls can cause unforeseen serious hazards and will void the warranty.

- DO NOT alter the appliance for a positive grounding battery system.

- DO NOT shorten the power cable or remove the sticker that indicates polarity.

- DO NOT perform a hi-pot test on the appliance unless the electronic ignition system (circuit board) has been disconnected. A hi-pot test applies a very high voltage between two conductors.

- DO NOT use a battery charger to supply power to the appliance, even when testing.

- If the vehicle requires welding, DO NOT connect the 12 V DC power to the appliance. Electrical welding will cause serious damage to the appliance controller.

United States and CANADA
This appliance must be installed in accordance with local codes or, in the absence of local codes, the Standard for Recreational Vehicles, ANSI A119.2/NFPA 501C or CAN/CSA-Z240 RV.

Selecting a suitable location

The appliance is designed to be installed on a floor or a fixed platform with access to water. Electrical connections are established at the back. Gas access is from the side or from the rear.

The appliance is designed exclusively for installation on an outside wall of a RV.

Installation of the water heater on the back of a trailer is not advised because of high pollution caused, e.g., by dirty and wet roads.

⚠ WARNING
Risk of poisonous exhaust gases due to improper installation!
- Make sure that the appliance is installed as described below.

- DO NOT install the appliance in any location where the vent may be covered or obstructed when any door on the RV is opened or due to the design of the RV or due to special features of the RV such as slide-out, pop-up, etc.

- DO NOT install on a swing door.

- DO NOT install the appliance under any window, slide-out or opening into the RV in order to prevent exhaust gases from entering the RV.

- DO NOT install the appliance in such a way that the cover plate is less than
  - 1 foot (30 cm) from each side and top of any window, slide-out or opening into the RV,
  - 6 feet (1.8 m) from any mechanical air supply inlet or
  - 3 feet (91 cm) from any gas tank connection or ventilation.

- Maintain a minimum clearance from combustible materials on sides, top, floor and rear (0 in.).

- Provide room for access to rear of appliance for servicing.

More information https://www.caravansplus.com.au

Preparing for installation

⚠ CAUTION

Sharp edges can cause cuts and injury!

- Always wear protective gloves to avoid injuries from sharp edges during installation work and while handling the appliance.

Preparing the installation site

1. Make sure that the appliance is in contact with the vehicle floor or a platform with adequate weight-bearing capacity when installed.

2. To install on a carpeted area, install a metal or wood panel under the appliance that extends at least 3 in. (7.6 cm) beyond the width and depth of the appliance.

3. If escaping water may damage components or the vehicle, install a collection pan below the appliance. Direct the flow of water from the pan to outside the vehicle.

4. Make sure that the front edge of the opening is surrounded by a solid frame to firmly anchor the appliance. If needed, build an appropriate frame (Fig. 13) with the following dimensions:

Width	a =	12.75 in. (324 mm)
Height	b =	12.75 in. (324 mm)
Depth	c =	>17.7 in. (450 mm)

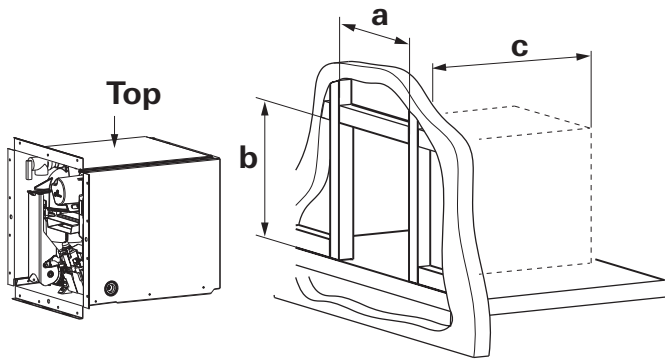

Fig. 13

- The required depth "c" depends on how the water hoses, electrical connection cable, and gas line are installed. The depth "c" must be determined for the particular situation before installation.
- The corners of the rough opening must be at right angles. The exterior wall opening must be the same dimensions with no rounded corners.
- An access door adapter kit is available for replacing existing water heaters, with a large cut-out in the outer wall of the RV. The adapter plate must be installed before the appliance is installed. The access door adapter kit includes detailed installation instructions.

5. Make sure you have suitable screws ready:

- Without access door adapter kit

  In order to securely fasten the appliance and the cover plate, the screws must be suitable for the chosen frame material and have a diameter of 0.138 in. (#6) to 0.164 in. (#8).

  – ***NOTICE*** Never use countersunk screws to secure the cover plate, as it will be damaged (tear). Use pan head screws.
  – For the length of the screws follow the screw manufacturer's guidelines.

- With access door adapter kit

  You must use the 22 screws 0.164 (#8) x 0.51 in. (4.2 x 13 mm) that are included with the access door adapter kit.
  – 14 x for fixing: appliance with adapter plate.
  – 8 x for fixing: cover plate with adapter plate.

More information https://www.caravansplus.com.au

Preparing the gas connection

⚠ WARNING

Risk of explosion due to improper installation of the gas connection!

- Make sure that the operating pressure of the gas supply corresponds to the operating pressure of the appliance 10.5 – 14 in. wc (26.2 – 34.9 mbar).

For correct installation, you must also observe the following:

- The gas connection (SAE 45° Flare Male – SAE J512, 5/8 in. – 18) is located inside the appliance.
- Make sure that the gas line to the appliance is able to supply the maximum required quantity of gas (≥ 60,000 BTU/h), without the gas pressure on the gas connector of the appliance falling below 10.5 in. wc (26.2 mbar).
- Consider the space needed to lay the gas line and integrate the appliance when planning the installation space.
- Guide the gas line into the installation space so that the appliance may be removed and reinstalled if service or repairs are needed.
- Allow sufficient length and flexibility in the gas line for connection or disconnection of the gas line.
- Reduce the number of separation points in the gas line to the technically required number.
- Avoid separation points in the gas line in spaces used by people.
- Ensure that the gas connection from the vehicle is in place before installing the appliance.

– Gas side connection

⚠ DANGER

Risk of explosion due to improper installation of the gas side connection!

- Use rigid metal 3/8 in. pipes (complies to 1/2 in. (12.7 mm) outside diameter) for the side gas connector of the appliance to the gas system of the RV.
- In exceptions, flexible gas hoses may be used for the side gas connector. The following 4 conditions must be met:
  1. Guidelines, laws or regulations allow the use of flexible gas hoses in this application.
  2. The flexible gas hoses are **certified** for this type of application.
  3. The flexible gas hoses can be inspected easily over their entire length.
  4. New flexible gas hoses are used for the installation.

The gas line is guided into the appliance from the side. A hole with a gas pipe grommet (side) is provided in the unit casing for this purpose.

- Slide the appliance carefully into the installation space until the installation frame makes contact.
- Make sure that the gas line connects vertically with the appliance's gas connection and without tension.
- If the connection is OK, push the gas line back. It will be connected in a later step.

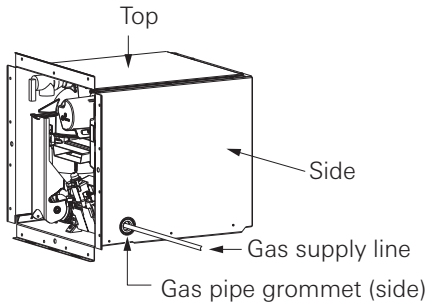

Fig. 14

More information https://www.caravansplus.com.au

– Gas rear connection

⚠ DANGER

Risk of explosion when using flexible gas hoses with a gas rear connection.

- Flexible gas hoses can leak due to the high temperatures in the appliance.
- You must use rigid metal 3/8 in. pipes (complies to 1/2 in. (12.7 mm) outside diameter) for a gas rear connection.

Truma offers a rear installation gas connection kit (part no. 77000-37500) if installation from the back of the appliance is required.

Scope of delivery:

- A brass elbow with a 45° SAE flare style fitting,
- a plug,
- a gas pipe grommet (rear) and
- a cable tie are included.

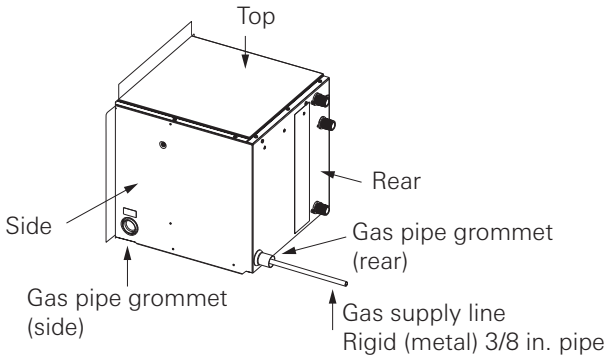

Fig. 15

- Open the pre-punched hole on the rear side of the appliance.
- Insert the gas pipe grommet (rear) in this hole (pay attention to the direction).

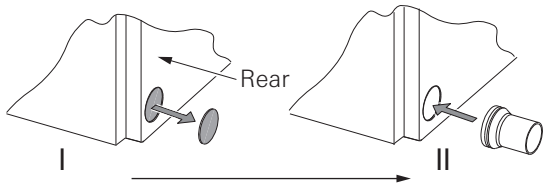

Fig. 16

Preparing the water connection

All water connections on the appliance are 1/2 in. NPT male connections.

- Use only pressure pumps in the water system, not immersion pumps, as air in the water system could cause malfunctions.
- The network of lines must be planned before installation (refer to “Connection diagrams” on page 31).
- Keep the length of the water pipes as short as possible.
- Because of the risk of frost, install water pipes only in adequately heated areas of the RV.
- Avoid thermal bridges.
- Install water pipes in a rising direction so that air in the pipes can escape.
- For AquaGo® comfort plus
  Protect the circulation line against heat loss with sufficient insulation material.

- Use a suitable connector with a seal for establishing the water connection to the appliance.

- Use of flexible water hoses of at least 1/2 in. diameter is preferred.

- Make sure that all water hoses are installed without kinks.

- Make sure that the water connections from the vehicle are in place before installing the appliance.

Preparing the 12 V DC electrical connection

All electrical connections must be made in compliance with all national, regional or local electrical codes.

⚠ WARNING

Risk of a short circuit and hazardous situations due to improper installation of the electrical connection!

- Use only insulated terminals for all electrical connections.
- The positive line must be fused with a 7.5 A fuse near the battery's positive terminal.
- The power supply cable must have a diameter of at least:
  - 16 AWG (1.5 mm^2 MWG) for up to 40 ft (12 m) length (bidirectional)
  - 14 AWG (2.0 mm^2 MWG) for up to 66 ft (20 m) length (bidirectional)

- Establish the 12 V DC electrical connections according to the connection diagram see "Electrical connection for all models" on page 31.

- To ensure reliable operation:
  - Provide a constant voltage supply.
  - Filter any AC spikes or voltage surges.
  - The AC voltage ripple must not exceed 1 Vpp.

- Make sure that the electrical connections from the vehicle are in place before installing the appliance.

Mounting the control panel

Only AquaGo® comfort / AquaGo® comfort plus

- NOTICE **Damage to the control panel from wetness and moisture.** You must install the control panel at a place inside the RV that is protected against moisture and wetness.

- Install the control panel (Fig. 17- 27) where it can be seen easily.

  - A 9 m control panel cable (27a) is included with the delivery.

- Drill a 2 1/8 in. (54 mm) diameter hole.

- Insert the plug (27b) on the control panel (27) until it clicks into place.

- Clamp the control panel cable (27a) in the cable duct of the control panel.

- NOTICE **Damage to the control panel cable at temperatures above +60 °C.** Do not install the control panel cable on or fix it to hot components.

- Slide the control panel cable to the back and lay it to the appliance.

- Fix the control panel with 4 screws (27d).

- Install the cover frame (27e).

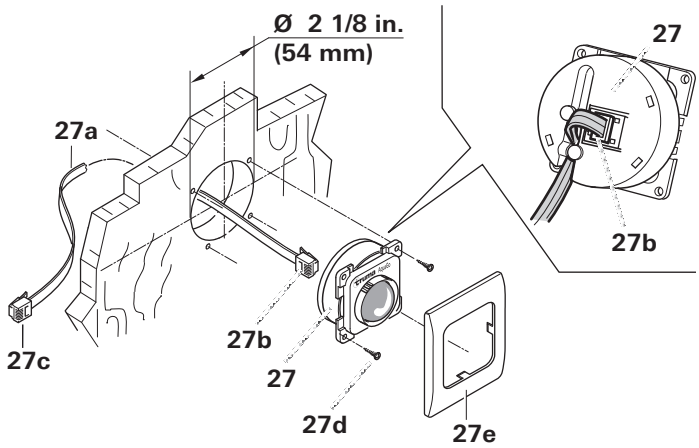

Fig. 17

More information https://www.caravansplus.com.au

Connection diagrams

- The drawings are not intended to describe a complete system. It is up to the certified service technician to determine the necessary components for and configuration of the particular system being installed (for example an additional surge protector).
- The drawings do not imply compliance with state or local code requirements or regulations. It is the certified service technician's responsibility to make sure that the installation is in full compliance with all state or local code requirements or regulations.

Model AquaGo® basic / AquaGo® comfort

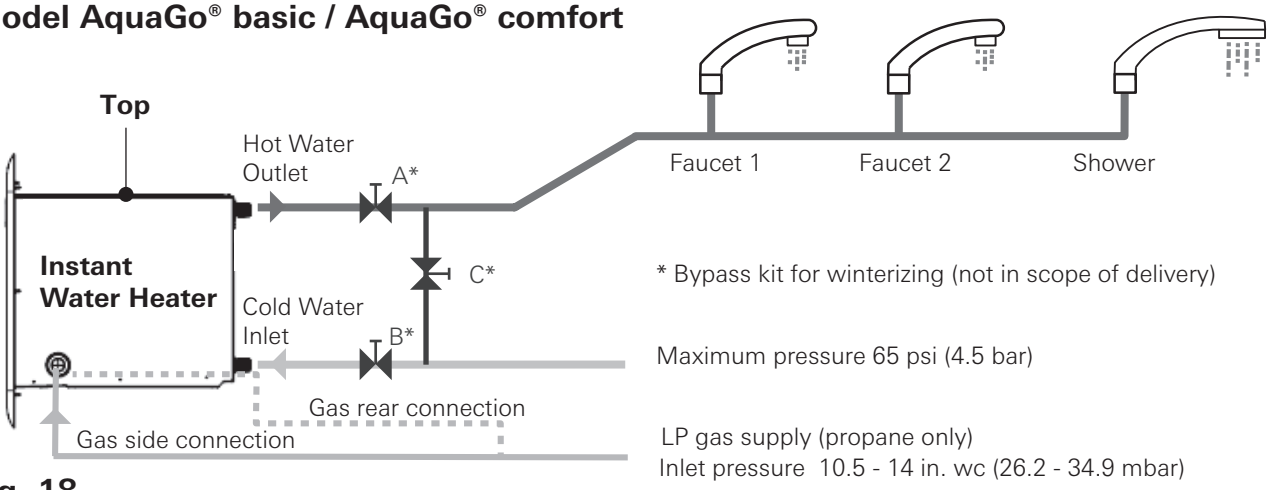

Fig. 18

Model AquaGo® comfort plus

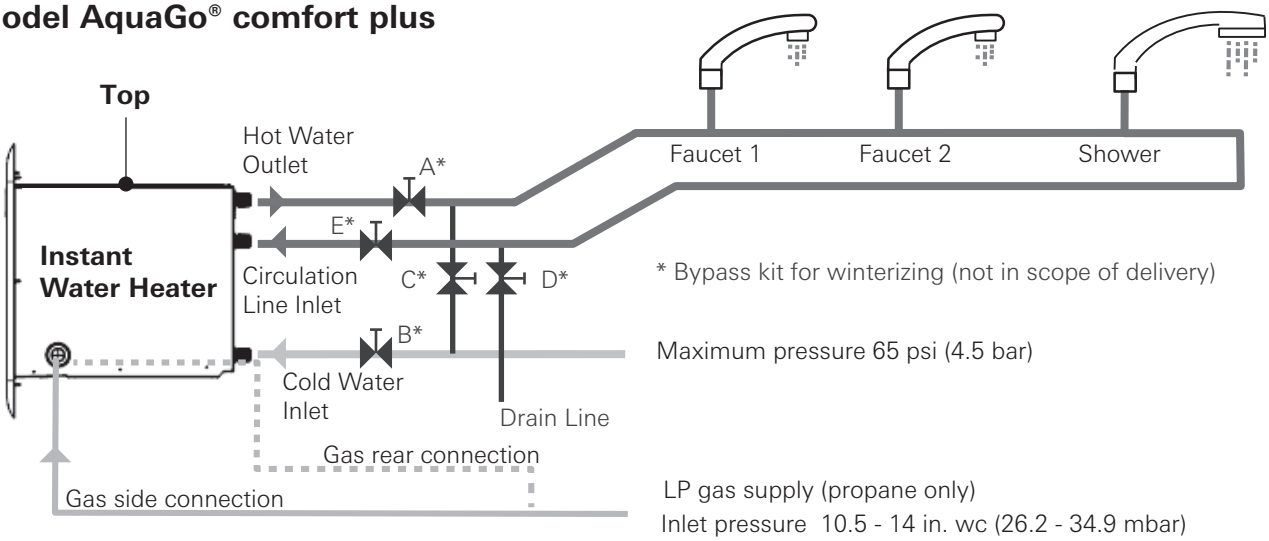

Fig. 19

Electrical connection for all models

Maximum length of the power supply cable (including cables for the optional switch):

- for 16 AWG or 1.5 mm² MWG: max. 40 ft (12 m) (bidirectional)
- for 14 AWG or 2.0 mm² MWG: max. 66 ft (20 m) (bidirectional)

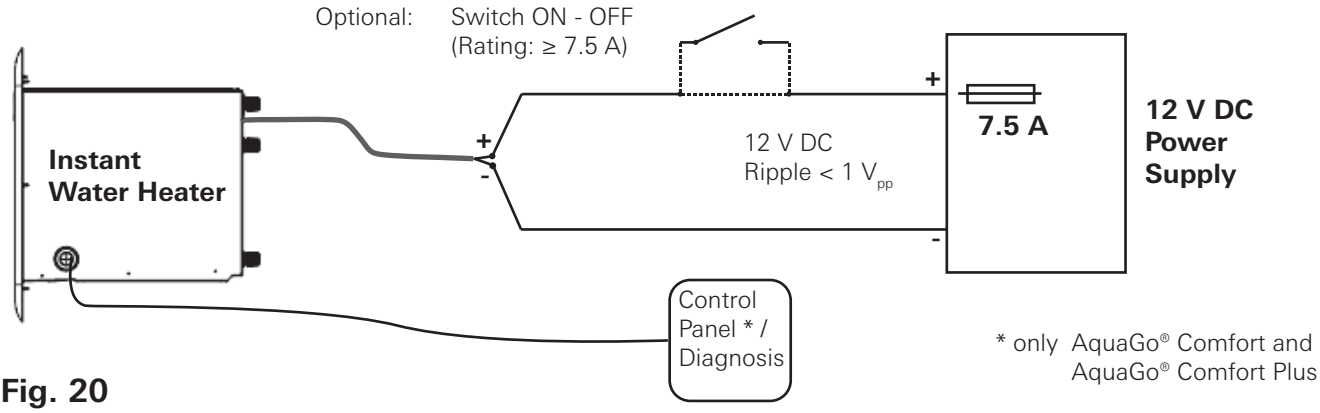

Fig. 20

More information https://www.caravansplus.com.au

Installing the appliance

Before installation, read "Preparing for installation" on page 27 and the following.

⚠ CAUTION

Sharp edges can cause cuts and injury!

- Always wear protective gloves to avoid injuries from sharp edges during installation work and while handling the appliance.

- Slide the appliance carefully into the installation space until the installation frame makes contact.

- *NOTICE* **Damage to the appliance and/or the RV!** Do not use adhesive sealing material (e.g. silicone) for the watertight seal. Otherwise damage may occur when the appliance is moved during servicing.

- The appliance must be installed with a watertight seal with the outer skin of the vehicle.
  To achieve the watertight seal:
  – Pull the appliance out ≈ 2 in. (5 cm).
  – Apply an adequate amount of watertight sealing material to the entire flange area of the installation frame and at the corners, see gray marking in Fig. 21.
  – Slide the appliance carefully into the installation space until the installation frame makes contact.

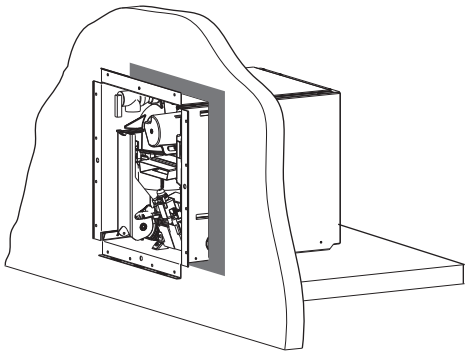

Fig. 21

- Screw the appliance into the vehicle's frame with the prepared 14 screws. See 5. "Make sure you have suitable screws ready:" on page 27.

- Make sure that the unit casing corners are 90 degrees square so that the cover plate/access door fits properly.

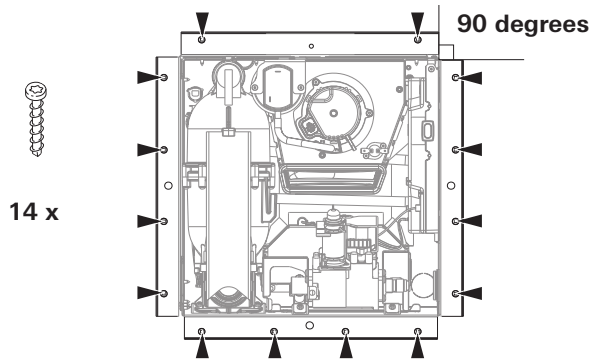

Fig. 22

- Immediately remove all excess sealing material.

- **⚠ WARNING Risk of death from poisoning and significant damage to the RV due to exhaust gas and leaking water!**
  – Make sure that there is a tight seal and that no exhaust gas or water can enter the RV.

- Check and make sure that there is a tight seal.

- Fasten the cover plate to the appliance (see Fig. 23):
  – Position the cover plate.
  – Screw the cover plate only loosely. Start with screw 1.
  – Align the cover plate.
  – Uniformly tighten all 8 screws.

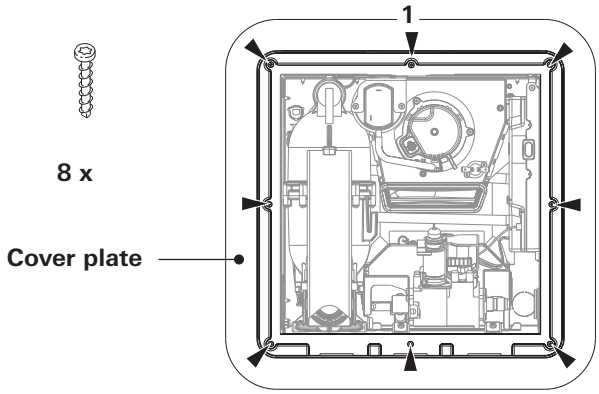

Fig. 23

More information https://www.caravansplus.com.au

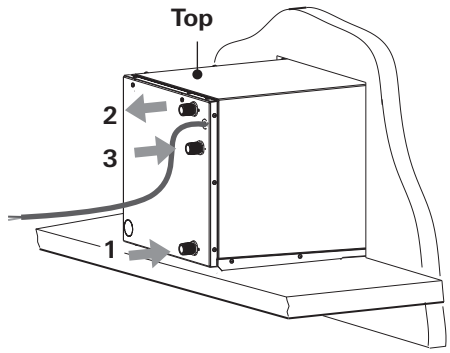

Fig. 24

- NOTICE **Damage to the appliance and the connections!**
  - Make sure that no gas lines, water hoses or electrical lines are kinked or pinched.
  - When establishing the water connections, observe the installation instructions and torques specified by the manufacturer.

- Connect the hose for cold water (1) at the bottom of the appliance.

- Connect the hose for hot water (2) at the top of the appliance.

- **Model AquaGo® comfort plus only:** Connect the hose for the circulation line (3).

- Check all connections for water leaks.
  - Repair leaks as needed.
  - Repeat check for water leaks and take any necessary steps to repair the leaks at all water connections.

- Connect the electrical lines with the proper polarity to the 12 V DC power supply. Refer to “Electrical connection for all models” on page 31). Install a 7.5 A fuse (see Fig. 20).

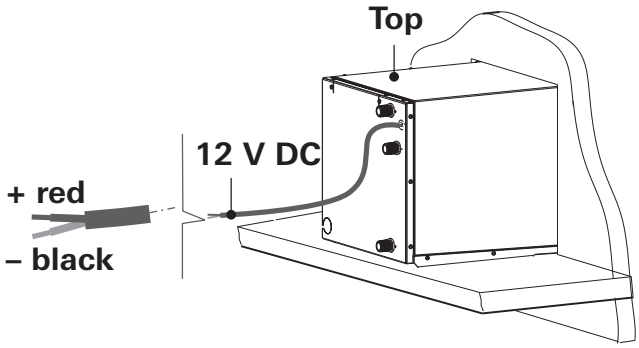

Fig. 25

Gas connection

⚠ WARNING

Risk of explosion or poisoning due to improper installation!

- Permit only a certified service technician to perform installation.
- Make sure that the manual shut-off valve in the gas line of the appliance is closed.
- Make sure that the gas line is centered and tension-free when it enters the grommet so that the gas line will not abrade the grommet.
- Make sure that the gas line has an SAE 45° Flare Female connector.

Additional rules for the appliance gas connector.

- Make sure that the gas line is free of dirt, chips, etc.
- Never use pipe dope on a flare fitting. The flare fitting is a dry seal.

Connecting the gas line (gas side connection)

- **Only AquaGo® comfort / AquaGo® comfort plus (with control panel)**
  - Feed the control panel cable (approx. 10 in. (25 cm)) from outside through the gas pipe grommet (side).
  - Attach the control panel cable to the control unit.
  - Hook the control panel cable on to the clip.

- Guide the prepared gas line through the gas pipe grommet (side).

- Screw the gas line’s union nut (wrench size 3/4 in. (19 mm)) onto the appliance’s gas connection so it is finger-tight.

More information https://www.caravansplus.com.au

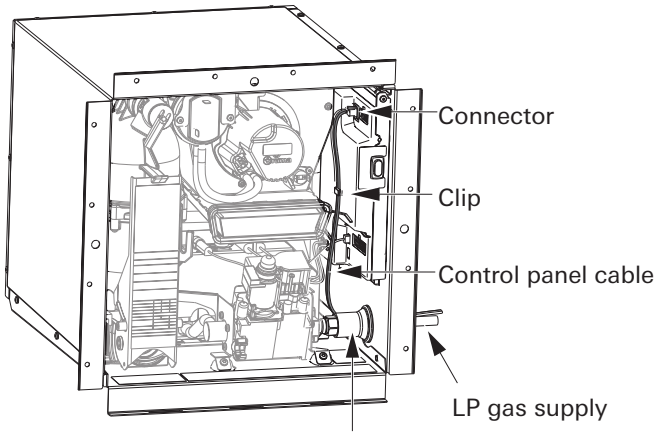

Fig. 26

- NOTICE **Gas valve may be damaged during tightening!** Use a second wrench to counterhold at the square end (wrench size 11/16 in. (18 mm)).
- Use a torque wrench to tighten the union nut (nominal torque 15 lb-ft (20 Nm)).
- ⚠ WARNING **Risk of poisoning and/or explosion!** Improper tightening of the cable tie could result in gas/exhaust entering the RV.
- Close the cable tie so that the gas pipe grommet (side) tightens the gas pipe passage (see Fig. 27).

A cable tie is provided with the appliance. You will find it fixed to the gas valve.

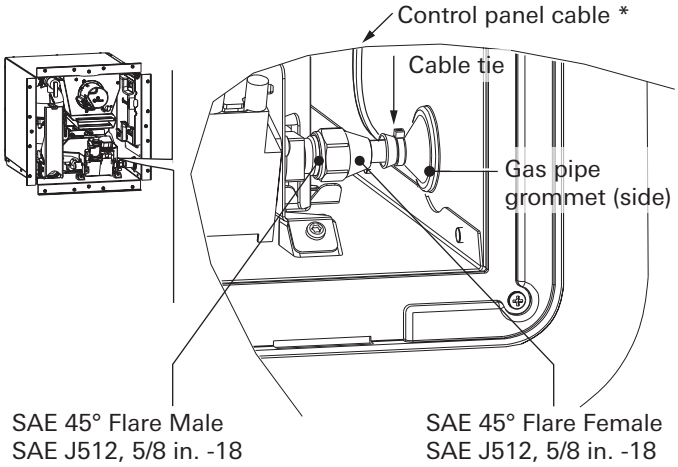

* AquaGo® comfort / AquaGo® comfort plus

Fig. 27

Connecting the gas line (gas rear connection)

- Remove the gas pipe grommet (side).
- Slide the prepared gas pipe through the gas pipe grommet (rear) from behind so that the elbow fitting can be mounted.

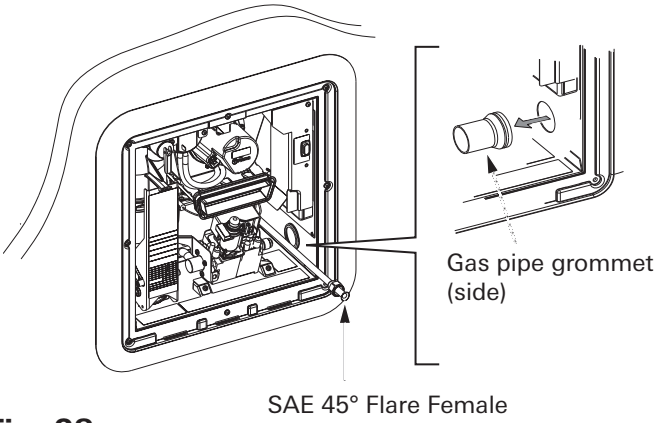

Fig. 28

- NOTICE **Gas line may be damaged during tightening!** Use a second wrench to counterhold at the square end (wrench size 9/16 in. (14 mm)).
- Mount the elbow union (45° SAE flare style) on the gas pipe in the direction shown (see Fig. 29).
- Use a torque wrench to tighten the union nut (nominal torque 15 lb-ft (20 Nm)) (brace against the elbow union with wrench size 9/16 in. (14 mm)).

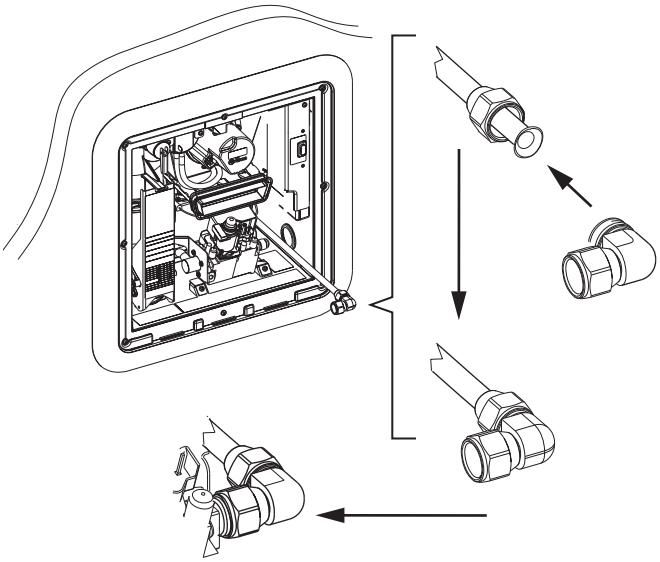

Fig. 29

More information https://www.caravansplus.com.au

- Screw the gas line's union nut (wrench size 3/4 in. (19 mm)) onto the appliance's gas connection so it is finger-tight.

- NOTICE **Gas valve may be damaged during tightening!** Use a second wrench to counterhold at the square end (wrench size 11/16 in. (18 mm)).

- Use a torque wrench to tighten the union nut (nominal torque 15 lb-ft (20 Nm)).

- **Only AquaGo® basic (without control panel):**

  – Close the side hole with the plug.

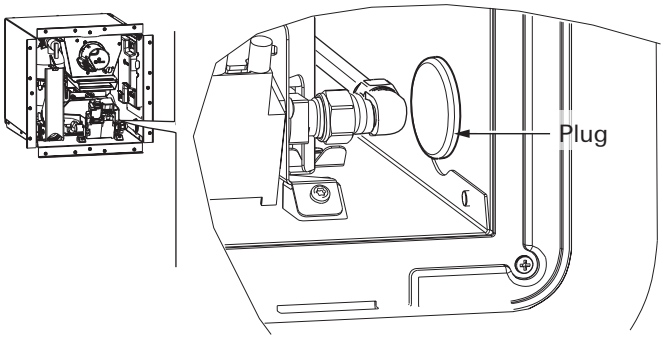

Fig. 30

- **Only AquaGo® comfort / AquaGo® comfort plus (with control panel)**

  – NOTICE **Damage to the control panel cable at temperatures above +60 °C.** Do not install the control panel cable through the rear gas pipe connection. You must feed the control panel cable through the hole on the side.

  – Slide the side gas pipe grommet on to the control panel cable (bush points towards hole). The control panel cable must protrude by about 25 cm.

  – ⚠ WARNING **Risk of poisoning and/ or explosion!** Improper tightening of the cable tie could result in gas/exhaust entering the RV. Close the cable tie so that the side gas pipe grommet tightens the control panel cable passage.

  – Fix the side gas pipe grommet to the control panel cable with a cable tie.

  A cable tie is provided with the appliance. You will find it fixed to the gas valve

  – Attach the control panel cable to the control panel.

– Hook the control panel cable on to the clip.

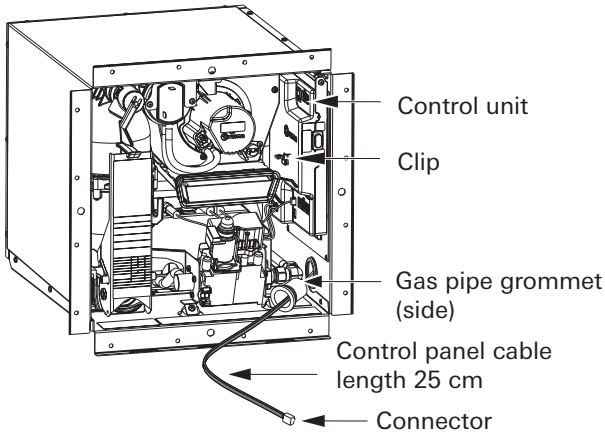

Fig. 31

  – Install the side gas pipe grommet with the control panel cable in the side hole.

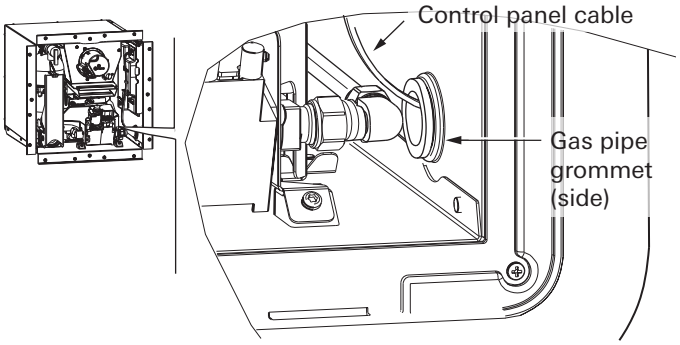

Fig. 32

Checking for gas leaks

⚠ WARNING

Risk of death and personal injury through fire and/or explosion!

- DO NOT use matches, candles or other sources of ignition when checking for gas leaks.
- After the gas supply is connected, check for gas leaks at all gas connections. Use a gas leak detection liquid.

1. Turn OFF the electrical power supply
2. *NOTICE* **Damage to the appliance from test pressure higher than 60 in. wc (150 mbar). Ensure that the test pressure is lower than 60 in. wc (150 mbar).**
3. Turn on the gas.
4. Check the appliance and all gas connections for gas leaks with leak detection liquid.
   – Bubbles indicate a gas leak that must be repaired.
5. Repair gas leaks as needed.
6. Repeat check for gas leaks at all gas connections.

Functional check

1. Bring the appliance into operation (refer to “Starting the appliance” on page 9).
2. Check the appliance for proper functionality.

   If faults occur during operation of the appliance, refer to “Troubleshooting” on page 22.
3. Provide operating and installation instructions to the vehicle owner.

The appliance is now ready for normal operation and use.

More information https://www.caravansplus.com.au

APPENDIX A – Error Codes

If the appliance malfunctions, LED 2 (refer to “Overview / Designation of parts” on page 2) will blink to indicate the malfunction. There are short and long intervals of blinking. The blinking will repeat every 3 seconds.

1. Write down the blinking intervals and check the list below.
2. Reset the appliance:
   – Switch off the appliance. / – Wait 5 seconds / –Switch the appliance on again.
3. If an error code is still displayed, contact an authorized Truma service center.

Error code	Blink code s =short = 0 l = long = 1	Error	Description
1	s,s,s,s,s,s,s,l	Flame not detected	There is a flame-detection error at the burner because the flame was not detected after release of gas and ignition. **Important:** The system indicates this error only after three attempts at intervals of approximately 30 seconds.
2	s,s,s,s,s,s,l,s	Error at over temperature switches (EOS, BOS)	The exhaust over temperature switch (EOS) or burner over temperature switch (BOS) is open/unplugged.
3	s,s,s,s,s,s,l,l	Error at exhaust pressure switch (EPS)	The EPS did not close when the flue fan was actuated because the fan did not push enough air through the exhaust channel. A cause could be, e.g., blocking of the exhaust channel or a faulty switch. OR The EPS is closed even though the flue fan is not running. Cause is a defective EPS or flue fan.
4	s,s,s,s,s,l,s,s	Error at water over temperature switch (WOS)	The WOS opened at a water temperature of over 185 °F (85 °C).
5	s,s,s,s,s,l,s,l	Flame detected at incorrect time	There is an error in flame detection of the burner because the flame was detected – before ignition or – before the release of gas or – after the gas was switched off.
6	s,s,s,s,s,l,l,s	Error in the safety circuit for gas valve	There is a heating request but gas cannot be released. One of the switches WOS, EOS, BOS, EPS is open/unplugged.
7	s,s,s,s,s,l,l,l	Error of burner MCU internal RAM	Error detected in the burner MCU’s internal safety monitoring feature (safety variables are no longer correct or RAM/STACK was overwritten by mistake).
9	s,s,s,s,l,s,s,l	Malfunction of water outlet temperature sensor WOT	Water outlet temperature sensor WOT – has a short circuit or – is open/unplugged.
10	s,s,s,s,l,s,l,s	Error in the safety circuit	There is a heating request but gas is not released because a valve-actuation signal was not activated.
11	s,s,s,s,l,s,l,l	Error of MCU watchdog gas release	There is a heating request but the MCU watchdog does not release the gas path.
12	s,s,s,s,l,l,s,s	Internal error	
13	s,s,s,s,l,l,s,l	Short circuit shut-off valve	Short circuit detection in the gas valve (shut-off part) detected a current > 1000 mA and shut off.
16	s,s,s,l,s,s,s,s	Malfunction of the MCU	Internal error of the control unit.
20	s,s,s,l,s,l,s,s	Malfunction of water inlet temperature sensor WIT	Water inlet temperature sensor WIT – has a short circuit or – is open/unplugged or – the temperature of the sensor is colder than 14 °F (-10 °C).
21	s,s,s,l,s,l,s,l	Malfunction of circulation line temperature sensor WCT	Circulation line temperature sensor WCT – has a short circuit or – is open/unplugged or – the temperature of the sensor is colder than 14 °F (-10 °C).
22	s,s,s,l,s,l,l,s	Malfunction of gas valve, modulation section	Error at gas valve, modulation level, because - the modulator has a short circuit or - is open/unplugged.
23	s,s,s,l,s,l,l,l	Voltage is too high	The main power supply’s voltage detector measured a voltage level of >16.4 V.
24	s,s,s,l,l,s,s,s	Voltage is too low	The main power supply’s voltage detector measured a voltage level of <10 V.
25	s,s,s,l,l,s,s,l	Flue fan current consumption error	The current detector for the flue fan has measured a current outside the permitted limits.
26	s,s,s,l,l,s,l,s	Circulation pump current consumption error	The current detector at the circulation pump has measured a current outside the permitted limits.
27	s,s,s,l,l,s,l,l	Water circulation pump is running dry.	The circulation pump does not generate water flow. The water system may not be filled or not sufficiently vented. The circulation pump tries (20 times) to generate a water flow every 30 s (if successful, the error is reset).
28	s,s,s,l,l,l,s,s	Too low gas pressure.	Gas supply (in vehicle) to the appliance insufficient.
29	s,s,s,l,l,l,s,l	Too high heat power required.	You are trying to use more hot water than the appliance can supply.
30	s,s,s,l,l,l,l,s	Risk of freezing.	Temperature in the appliance below 27 °F (3 °C).
31	s,s,s,l,l,l,l,l	Decalcification finished.	–
32	s,s,l,s,s,s,s	Current too low.	Current in the antifreeze kit too low (e.g. cable break).
33	s,s,l,s,s,s,s,l	Current too high.	Current in the antifreeze kit too high (e.g. short circuit).

More information https://www.caravansplus.com.au

APPENDIX B – Functional Diagram

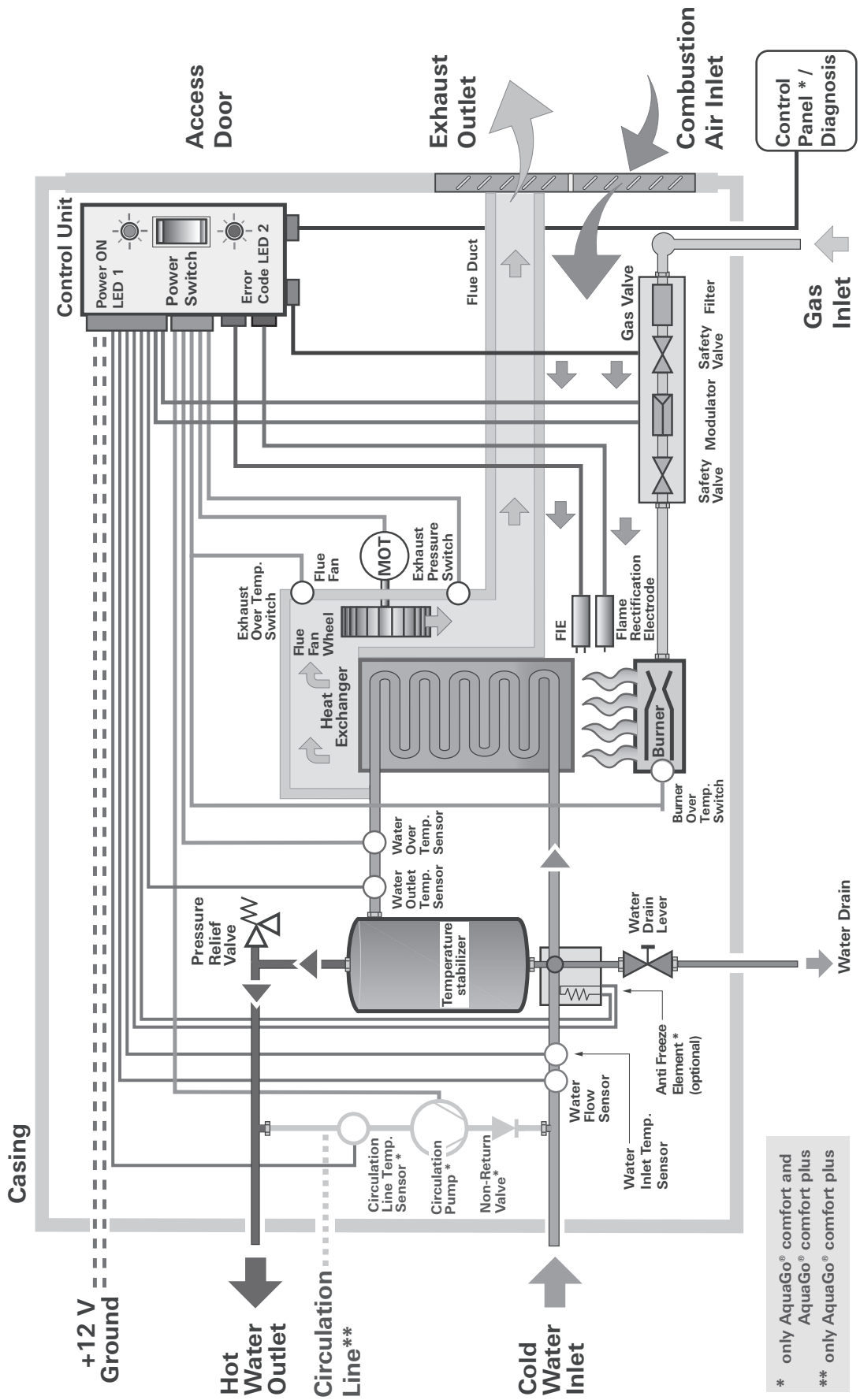

Fig. 33

More information https://www.caravansplus.com.au

APPENDIX C – Spare Parts (all models)

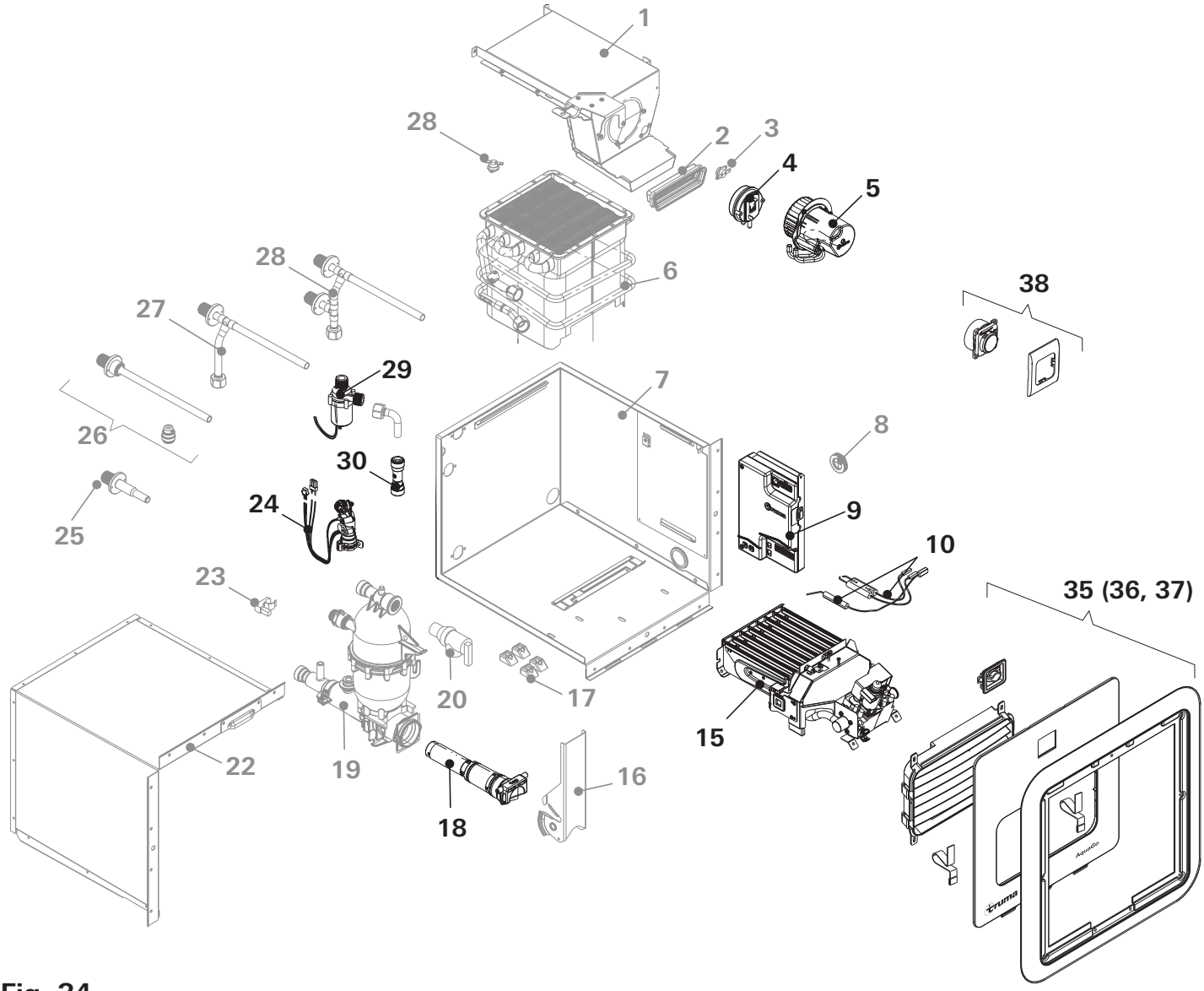

Fig. 34

Item Ref.	Part no.	Component
1	NYA	
2	NYA	
3	NYA	
4	77000-90100	Exhaust Pressure Switch
5	77000-90200	Flue Fan Assembly
6	NYA	
7	NYA	
8	NYA	
9	77000-00113	Control Unit Assembly
10	77000-91300	Electrodes
11	NYA	
12	NYA	
13	NYA	
14	NYA	
15	77000-90400	Burner Assembly
16	NYA	
17	NYA	
18	77000-90800	Filter Assembly
19	NYA	
20	NYA	

Item Ref.	Part no.	Component
21	–	–
22	NYA	
23	NYA	
24	77000-90500	Flow Sensor Assembly
25	NYA	
26	NYA	
27	NYA	
28	NYA	
29	77000-90600	Circulation Pump
30	77020-03500	Non-Return Valve Assembly
31	NYA	
32	NYA	
33	NYA	
34	NYA	
35	77001-01	Access Door Standard
36	77101-01	Access Door Adapter (not shown)
37	77201-01	Access Door XS (not shown)
38	77000-00089	Control panel
39	77000-00114	Sticker set (not shown)

More information https://www.caravansplus.com.au

APPENDIX D – Electrical Connection Diagram

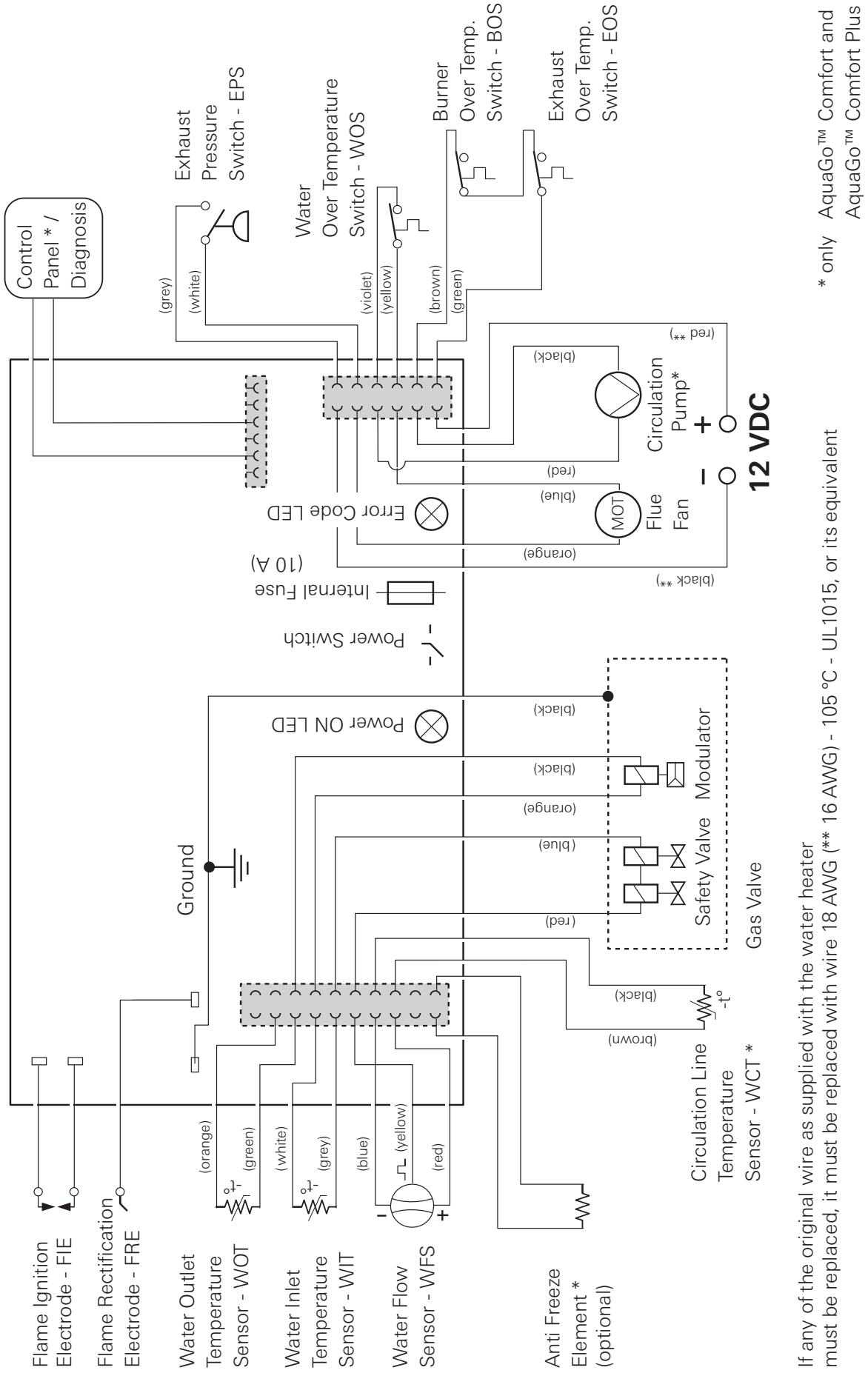

* only AquaGo™ Comfort and AquaGo™ Comfort Plus

If any of the original wire as supplied with the water heater must be replaced, it must be replaced with wire 18 AWG (** 16 AWG) - 105 °C - UL1015, or its equivalent

18 AWG or 1 mm² MWG (** 16 AWG or 1.5 mm² MWG)

Fig. 35

More information https://www.caravansplus.com.au

APPENDIX E – Notes for painting the access door and cover plate

Important Information

⚠ Observe all safety notes/instructions for painting the access door and cover plate.

The following parts (see Fig. 37) may be painted:

- The white cover plate
- The white outer surfaces of the access door

Material of the parts:

- The parts are made from a polycarbonate material.
- Check whether the paint to be used is suitable for polycarbonate.
- For optimum adhesion of the paint it may be necessary to apply a primer to the surfaces that will be painted.
- ***NOTICE*** Use of unsuitable paints may damage the parts. Follow the recommendations of the paint manufacturer.

The following parts (see Fig. 36) must not be painted:

- The black venting grid
- The turn lock
- The webbings

Work before painting

ℹ In order to simplify painting and reduce the work for masking, the turn lock and the venting grid can be removed/disassembled.

Please follow the steps below to remove the venting grid and the turn lock:

1. Open the access door.
2. Remove the venting grid:
   - Using a Torx T-15 remove the 4 screws securing the venting grid to the access door.
   - After removing the screws, depress the four (4) clips on the side of the venting grid and remove it as shown in Fig. 36.
3. Remove the turn lock:
   To remove the turn lock, depress the four (4) clips and remove it as shown in Fig. 36.
4. Mask the venting grid opening from the back side (side with waffle pattern).
5. Close the access door and fix it in the closed position for painting.
   - This can be done with help of tape that joins the flue fan and the edge of the turn lock opening (see Fig. 37 for this detail).
   - Remove any tape that hangs over the edge by more than 0.12 in. (3 mm).
   - Finally mask the turn lock opening with tape (hatched area). Take care not to exceed 0.12 in. (3 mm) from the edge (this is the area that will be covered by the turn lock).
6. Paint the access door and the cover plate.

Work after painting

7. Remove all masking.
8. Assemble the venting grid and the turn lock in the reverse order. Make sure that they are installed in the right direction.
9. Ensure turn lock operates correctly (if unsure: see “Closing the access door“ on page 9).

More information https://www.caravansplus.com.au

Painting a detached access door

If necessary for masking or painting, the access door can be detached temporarily.

- Remove the four (4) screws that fix the webbings.
- Fix the webbings again after painting.

⚠ WARNING

Danger of personal injury or damage to the recreational vehicle.

Unsecured webbings cause the access door to become loose and it may fall off when you are driving the RV.

- After painting, the webbings must be fixed firmly to the access door with the original screws.

More information https://www.caravansplus.com.au

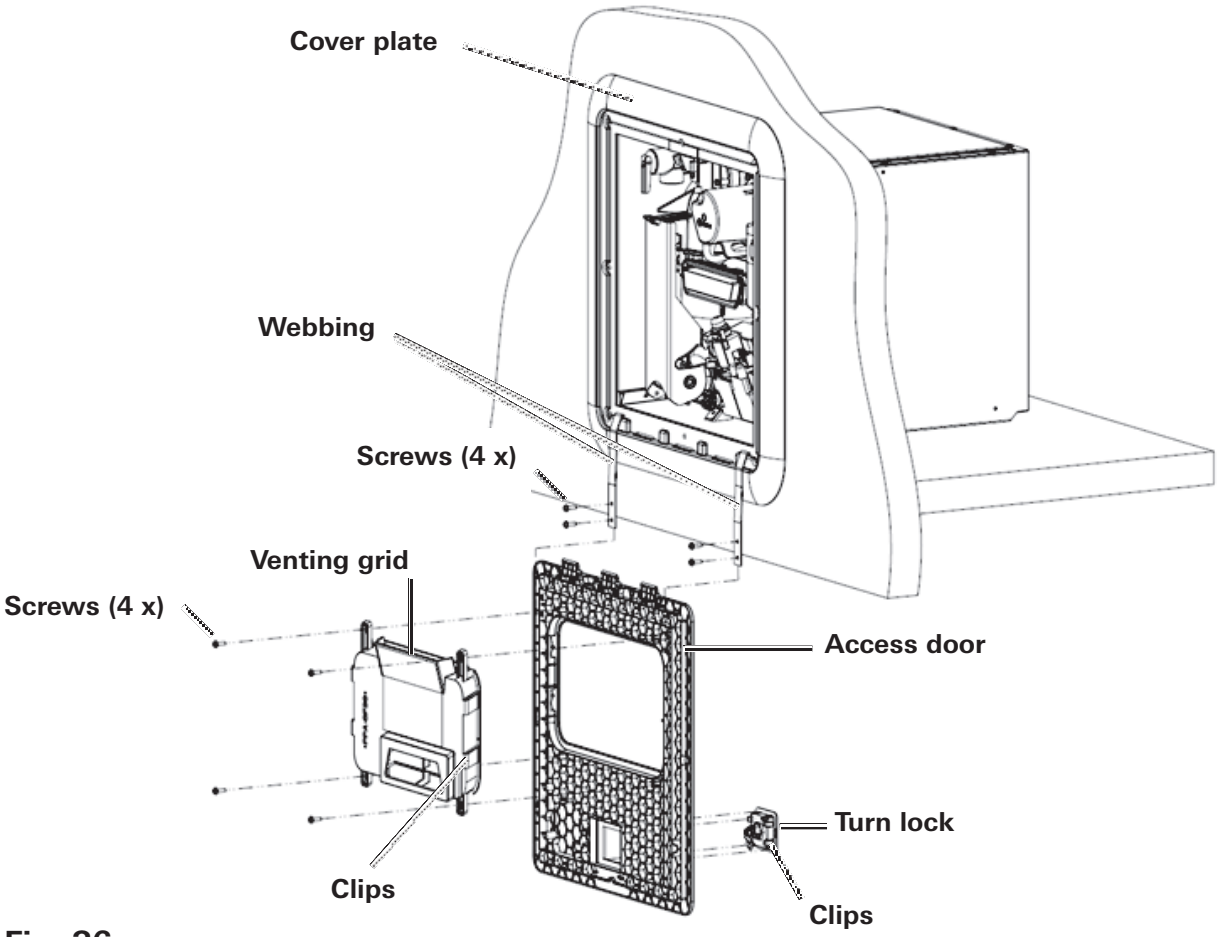

Fig. 36

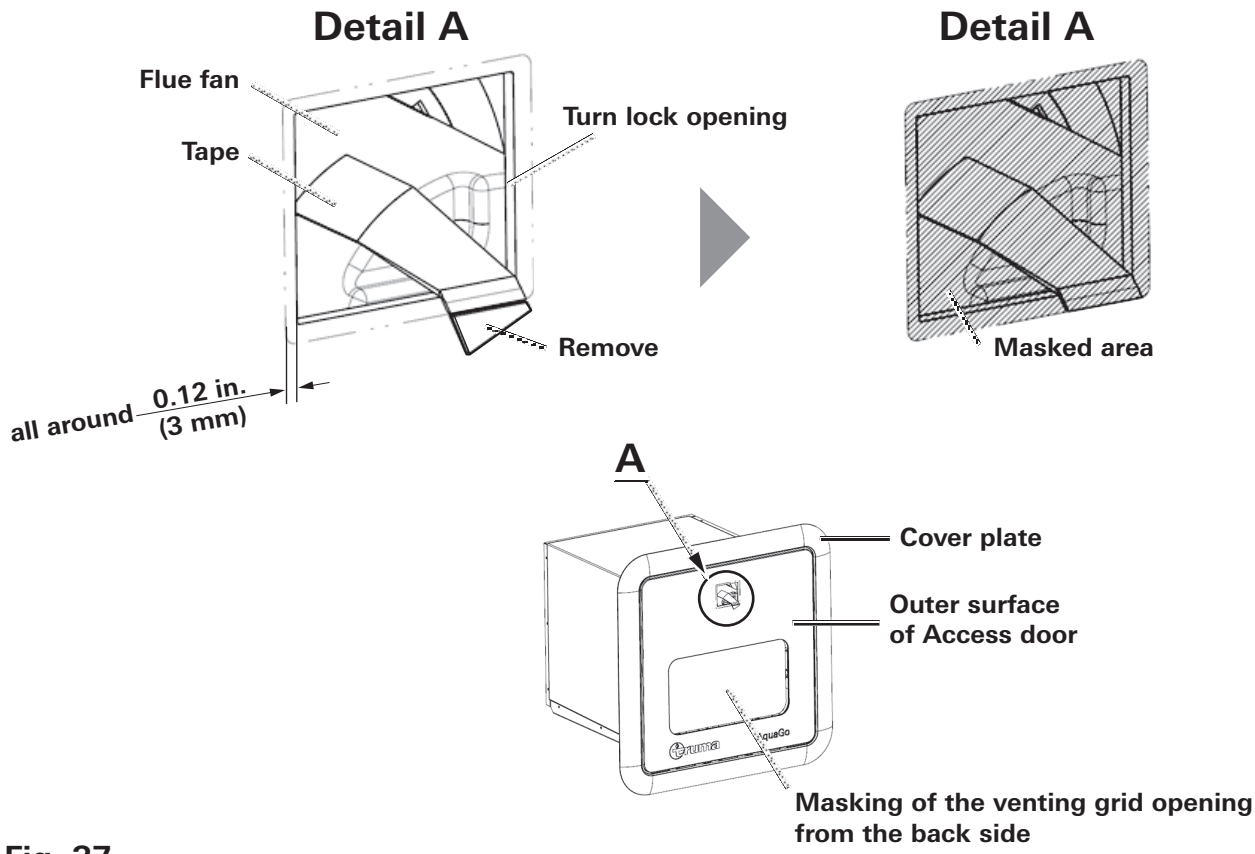

Fig. 37

More information https://www.caravansplus.com.au

USA In case you encounter any problems, please contact the Truma Service Center at 855-558-7862 or one of our authorized service partners. For details see www.truma.net.

Please have the model number and serial number (on water heater's type plate) handy when you call.

Manufacturing
Truma Gerätetechnik GmbH & Co. KG
Wernher-von-Braun-Straße 12
D - 85640 Putzbrunn
Germany
www.truma.com

Sales
Truma Corp
825 East Jackson Blvd.
Elkhart, IN 46516
USA
Toll Free 1-855-558-7862
Fax 1-574-538-2426
service@trumacorp.com
www.truma.net

More information https://www.caravansplus.com.au